JETWORKS

Boeing F/A-18E/F SuperHornet Parkjet v1.1

Photograph of actual aircraft.

4th Generation Jet Fighter

Construction Guide

F/A-18 SuperHornet History

The Boeing F/A-18E and F/A-18F Super Hornet are twin-engine, carrier-capable, multirole fighter aircraft variants based on the McDonnell Douglas F/A-18 Hornet. The F/A-18E single-seat and F/A-18F tandem-seat variants are larger and more advanced derivatives of the F/A-18C and D Hornet. The Super Hornet has an internal 20 mm M61 rotary cannon and can carry air-to-air missiles and air-to-surface weapons. Additional fuel can be carried in up to five external fuel tanks and the aircraft can be configured as an airborne tanker by adding an external air refuelling system.

Designed and initially produced by McDonnell Douglas, the Super Hornet first flew in 1995. Low-rate production began in early 1997 with full-rate production starting in September 1997, after the merger of McDonnell Douglas and Boeing the previous month. The Super Hornet entered service with the United States Navy in 2001, replacing the Grumman F-14 Tomcat, which was retired in 2006;

The Super Hornet was first ordered by the U.S. Navy in 1992. The Navy retained the F/A-18 designation to help sell the program to Congress as a low-risk "derivative", though the Super Hornet is largely a new aircraft. The Hornet and Super Hornet share many characteristics, including avionics, ejection seats, radar, armament, mission computer software, and maintenance/operating procedures. The initial F/A-18E/F retained most of the avionics systems from the F/A-18C/D's configuration at the time.

Designers Notes

Like the real Legacy Hornet, This Super Hornet design shares some of the components of the Hornet. An easy to fly, instantly recognisable classic in the air - the Hornet will look good in any collection.

Can be powered by up to 70mm EDF (4s) or pusher, both single seater and twin seater versions.

This guide is for the FA-18 E/F variants.

The Legacy Hornet is a separate project.

Before you start.

Adhesives

> For the majority of construction :
- UHU Creativ for Styrofoam (also called UHU POR)
- 3M 77 Spray adhesive.

>For wing spars and motor mounts :
- Epoxy. (5 and 15mins cure times are the most convenient) micro-baloons can be added to reduce weight.

> For servo's / and quick grab :
- Hot melt glue gun - Caution if the glue gets too hot it will melt foam - test first!

Tapes

> For holding parts tightly together whilst glue sets
- Low tack masking tapes

> For leading edges, hinges, general strengthening
- 3M Gift tape (Purple - not green one!) - I prefer lightweight plastic hinges.

Cutting parts

1. Print the plans,
2. Cut around each part using scissors - allow a border of approx (1/4") 6mm
3. Use either 3M spray mount or a very light coat of 3M 77 to the back of the parts and stick in an economical layout on the Depron foam.
4. Using a safety rule and craft knife over a cutting mat - important! use a fresh blade otherwise it will drag and spoil the foam. (I find the stanley knife perfect) make the straight edge cuts, then the curved parts freehand.
5. Once the parts are cut-out, keep the template stuck to the part until just before needed to help identify the parts.
6. After use, I find it helpful to keep all the used tempates in case replacement parts need making. (the glue eventually dries and they don't stick together!)

IMPORTANT Wherever the plans call for marking guidelines onto the depron, please ensure that you do otherwise it can cause problems later on. I suggest you use a Sharpie Fineliner to transfer the lines.

Glueing parts together.

1. Ensure a really good fit - this will reduce the amount of adhesive used. The Bar Sander is a great tool for this.
2. Follow the adhesive instructions closely.
3. Use ordinary steel head pins to help keep the parts located whilst epoxy sets.
4. Use objects as weights such as paperweights to apply pressure whilst adhesive sets.
5. Use masking tape to apply pressure whilst adhesive sets. Also use masking tape to along the slots for the wing spars whilst gluing the carbon rod spars into the wings.

All versions

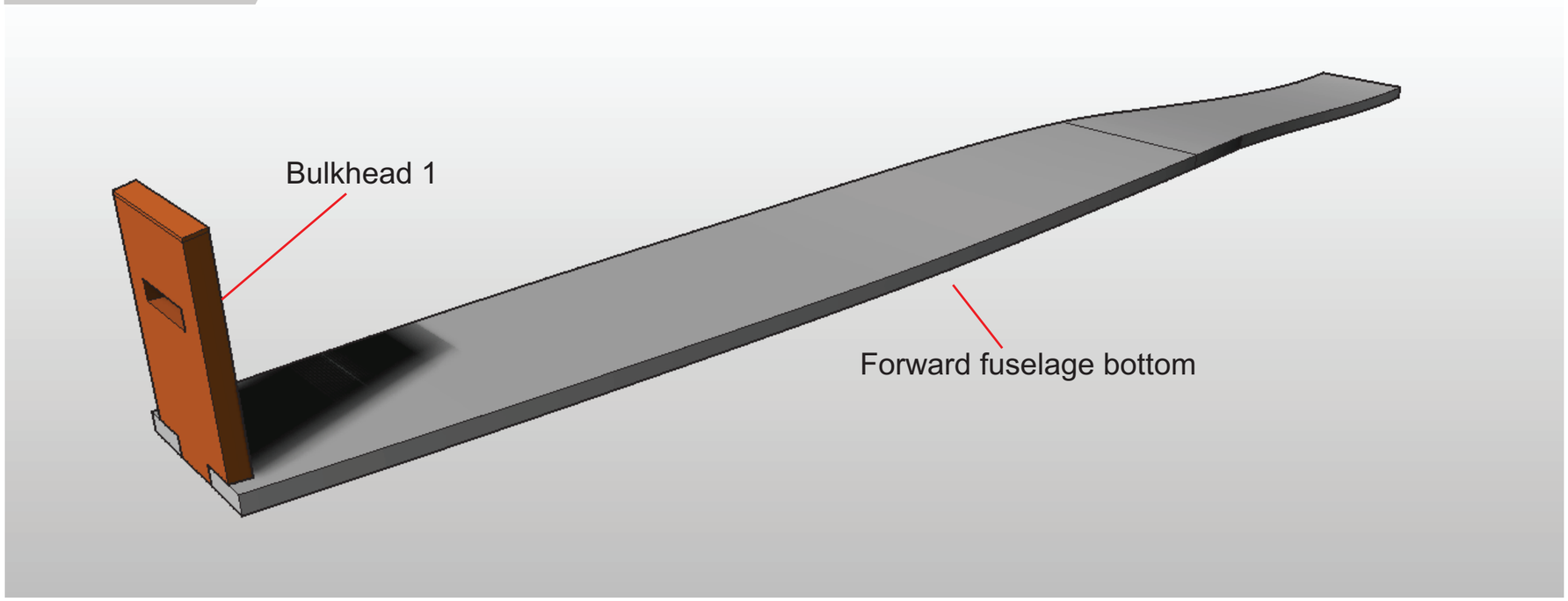

Gently curve the **Forward Fuselage (bottom)** to match the lower edge of the **forward Fuselage side.** Glue **Bulkhead 1** in place.

All versions

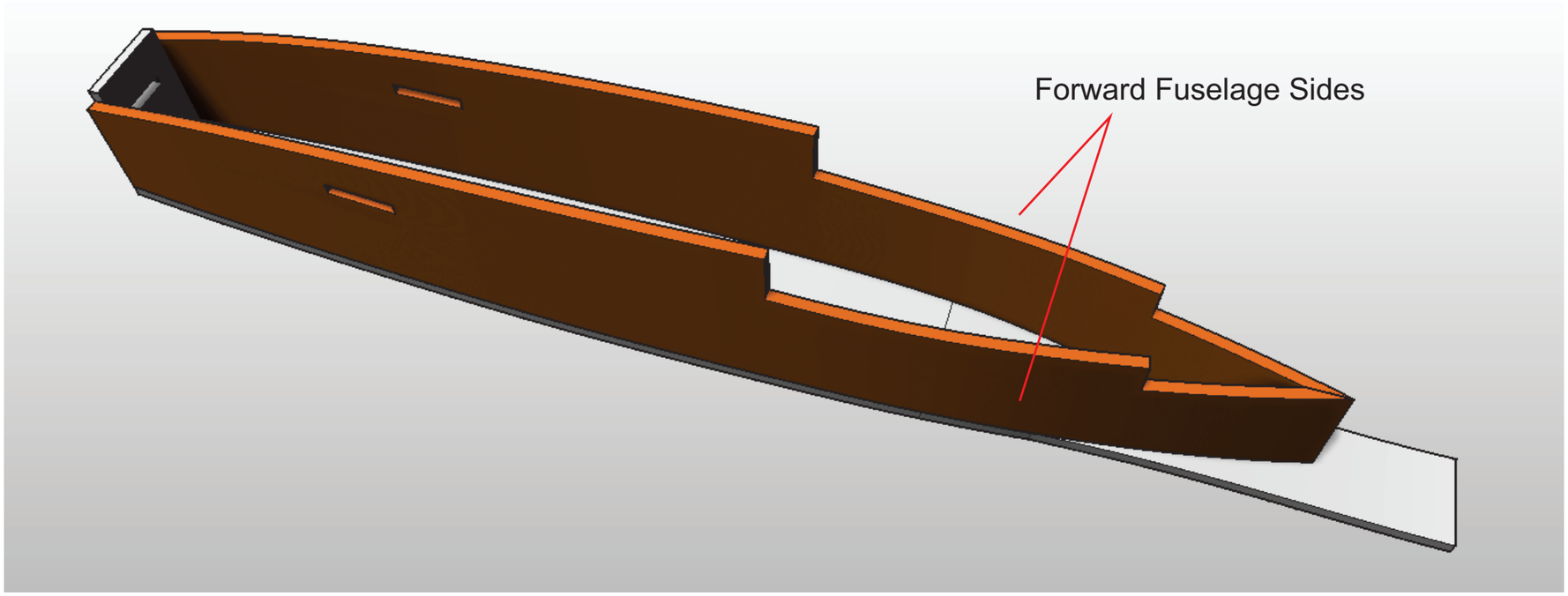

Gently curve the **Forward Fuselage sides** to match the base and glue in place.

Glue the **Lower forward corner reinforcers** to the forward fuselage bottom.

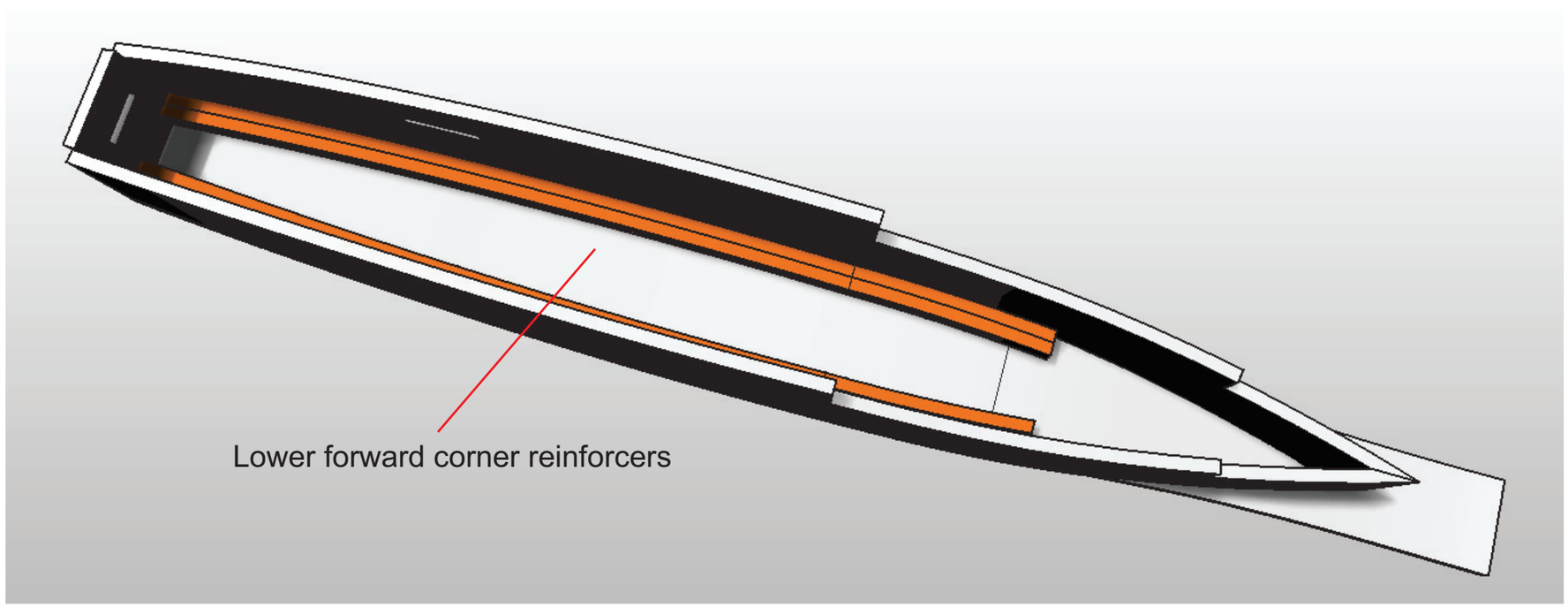

All versions

Glue **Bulkhead 2** to the assembly

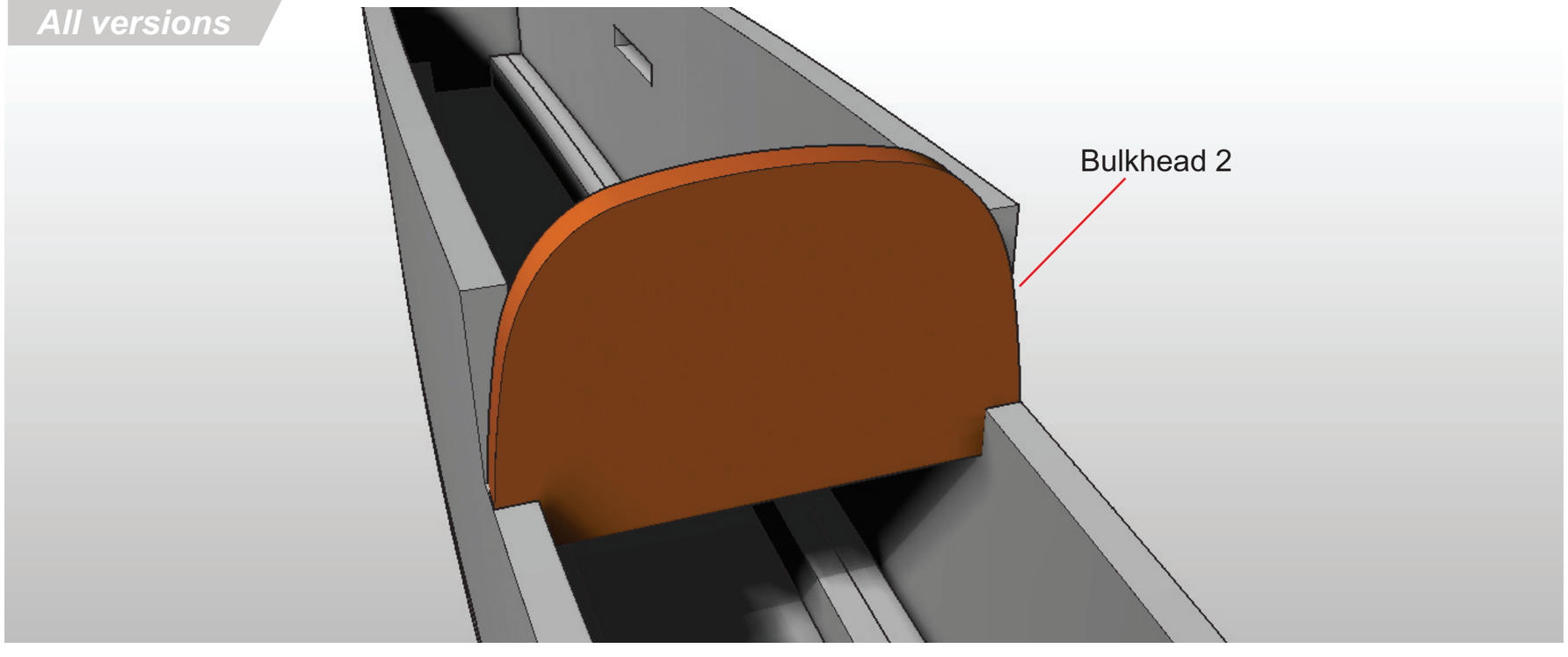

All versions

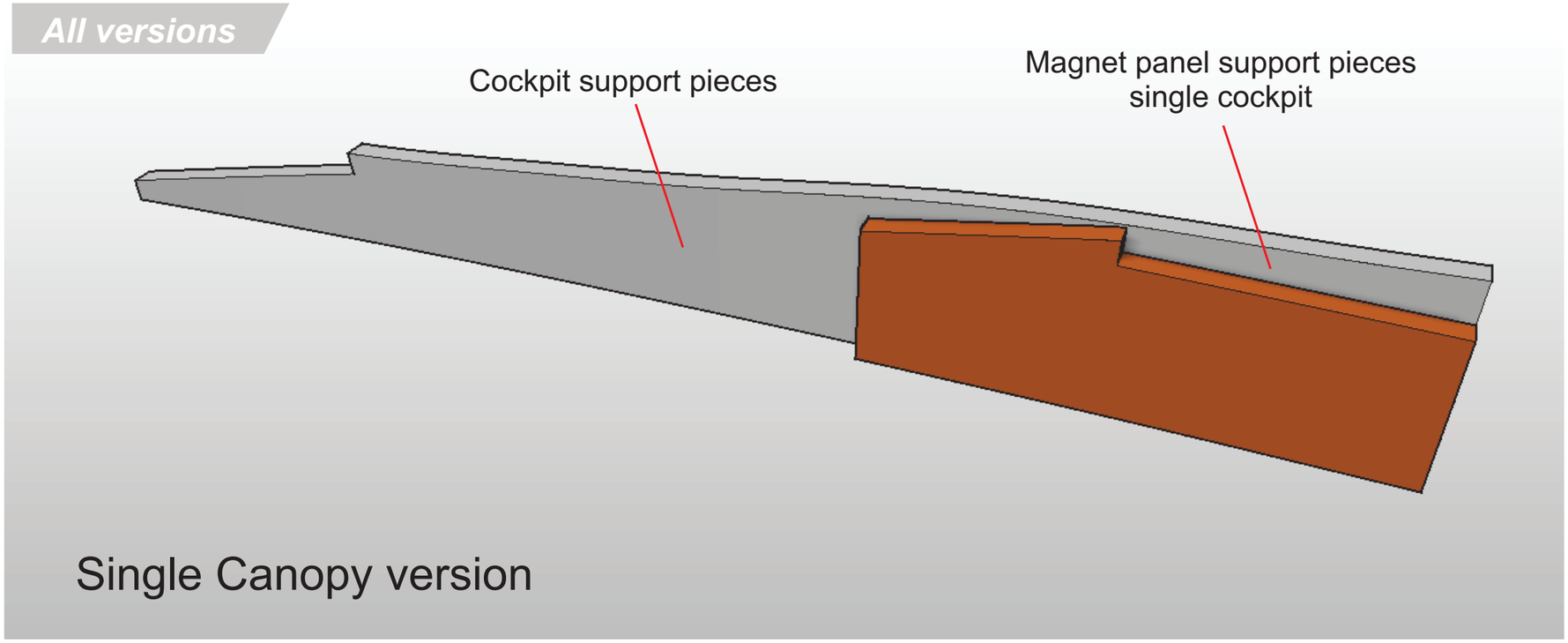

Make a mirrored pair of cockpit support assemblies.

Glue the Magnet panel support pieces to the rear corner of the **Cockpit support pieces** as shown.

All versions

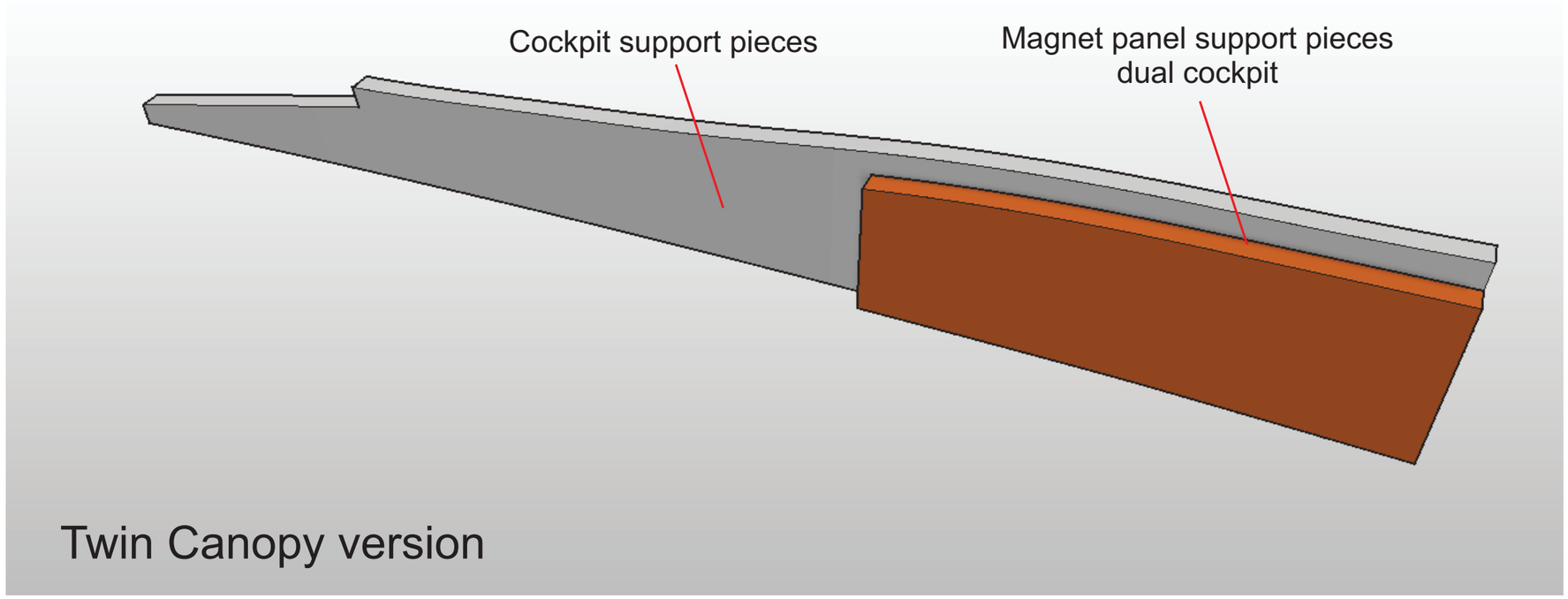

Make a mirrored pair of cockpit support assemblies.

Glue the Magnet panel support pieces to the rear corner of the **Cockpit support pieces** as shown.

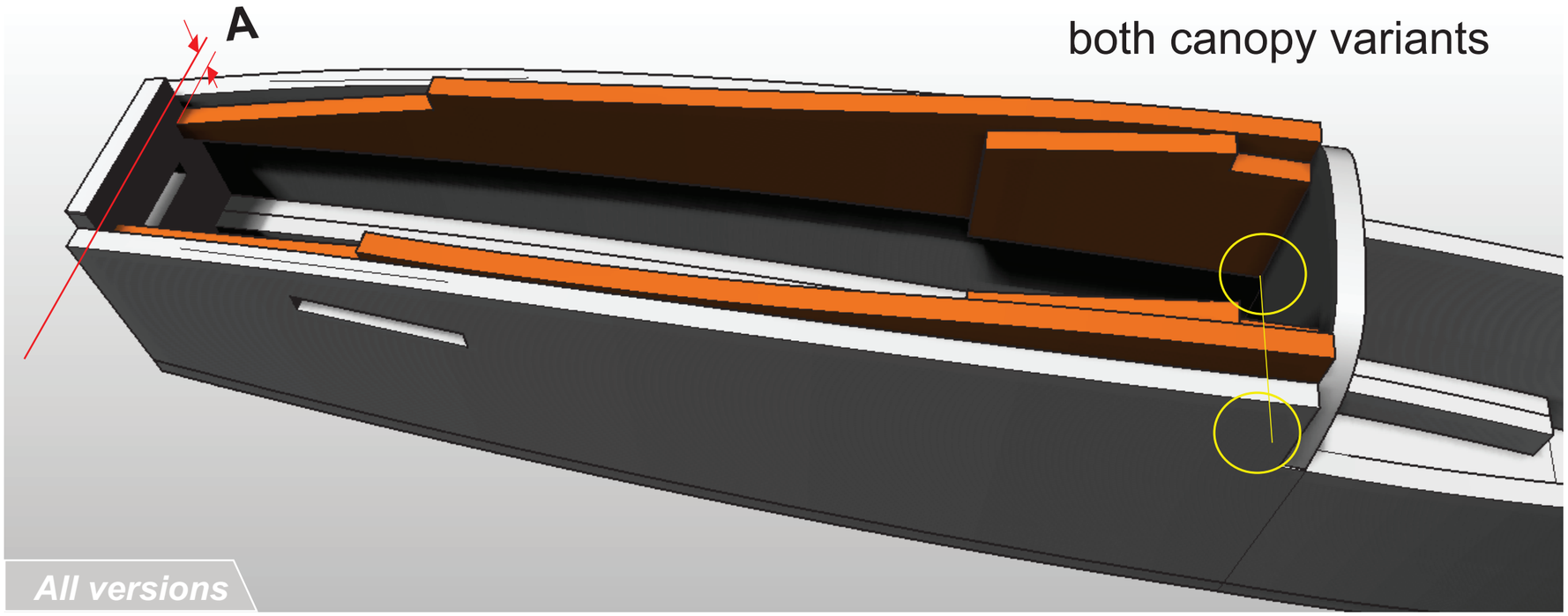

Align the cockpit support panels so that :-

the front is the thickness of your foam sheet lower than the fuselage side panels (A)

The rear aligns with the bottom of bulkhead 2

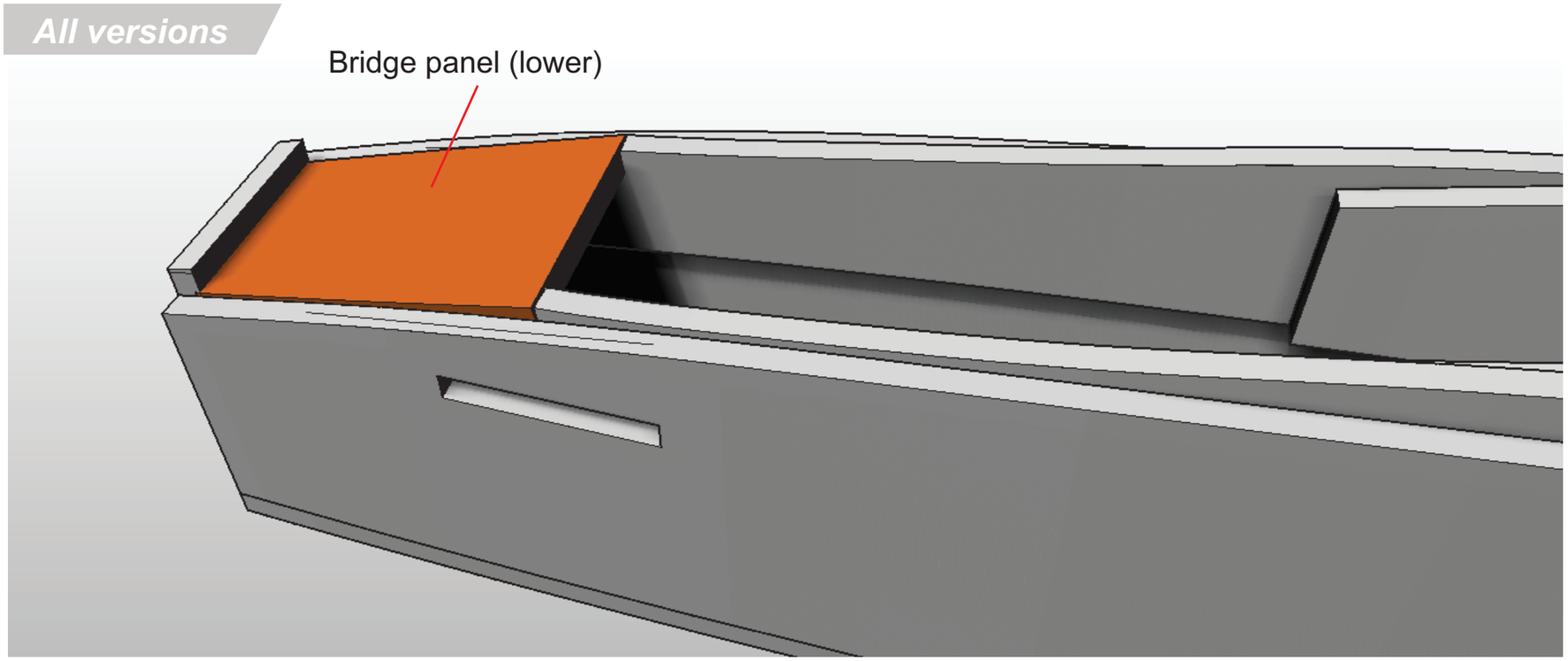

Glue **Bridge panel (lower)** to the assembly

All versions

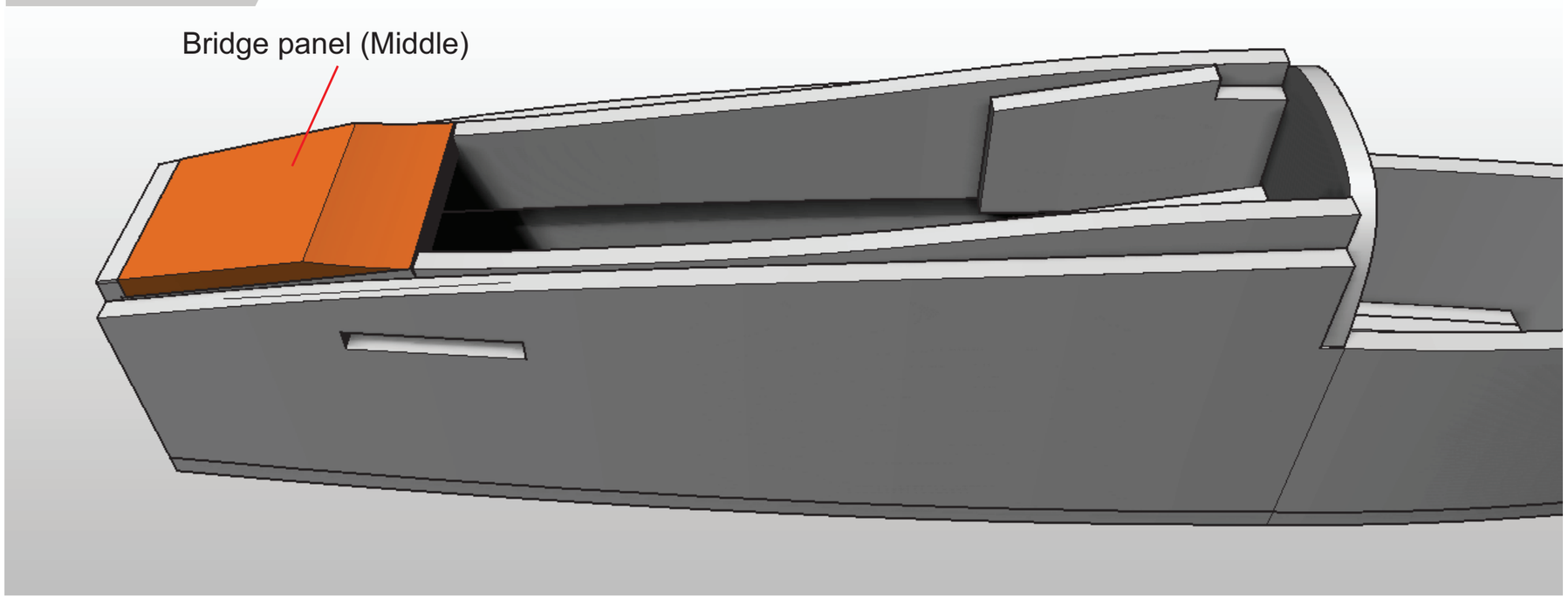

Glue **Bridge panel (middle)** to the assembly

All versions

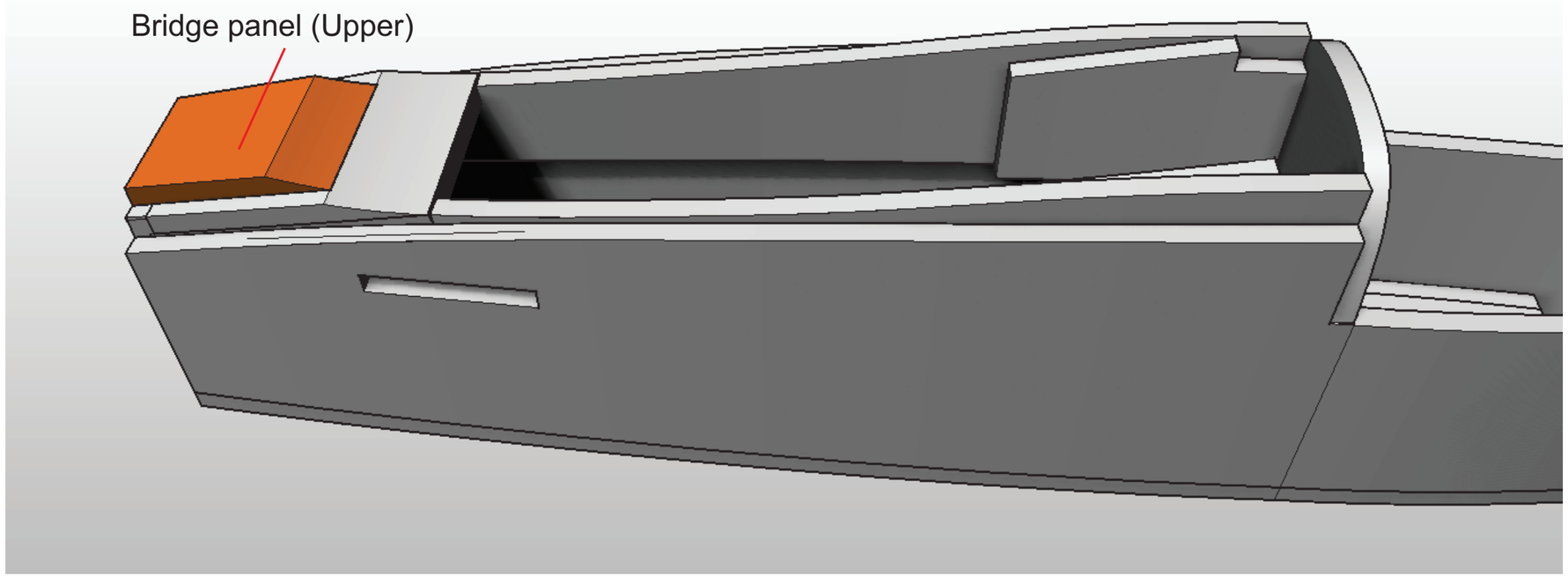

Glue **Bridge panel (upper)** to the assembly

All versions

Single Canopy version

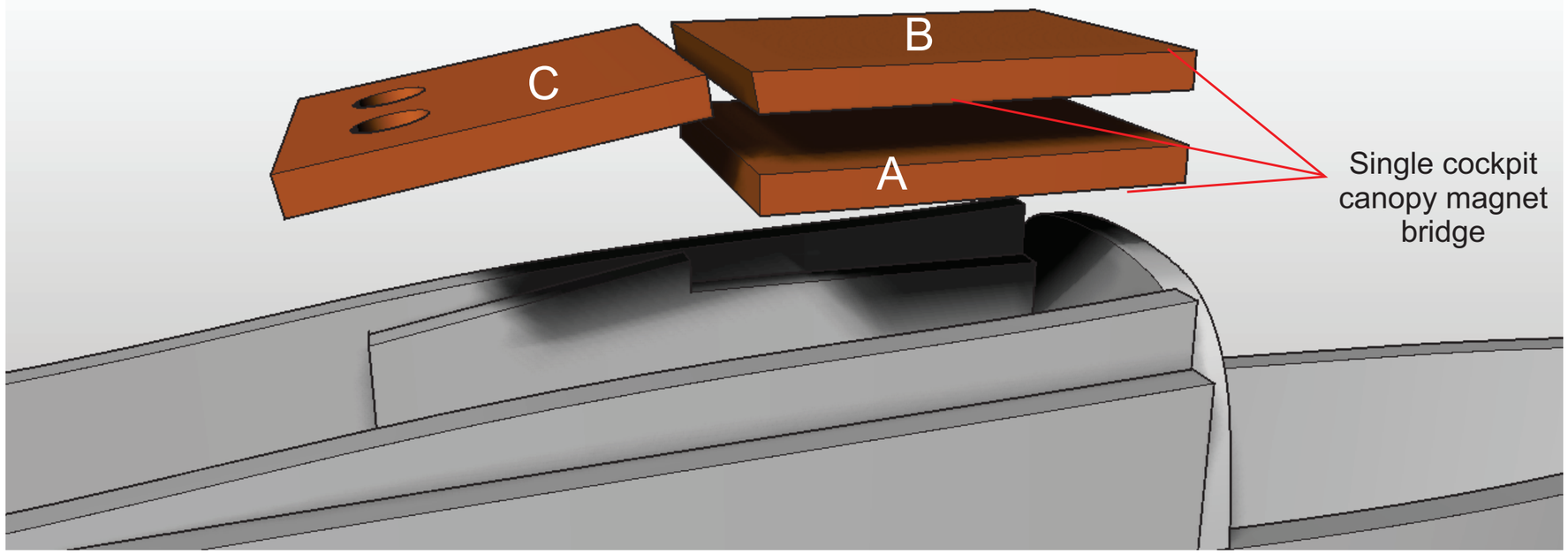

Glue the **Single Cockpit canopy magnet bridge** parts A,B and C in place.

All versions

Twin Canopy version

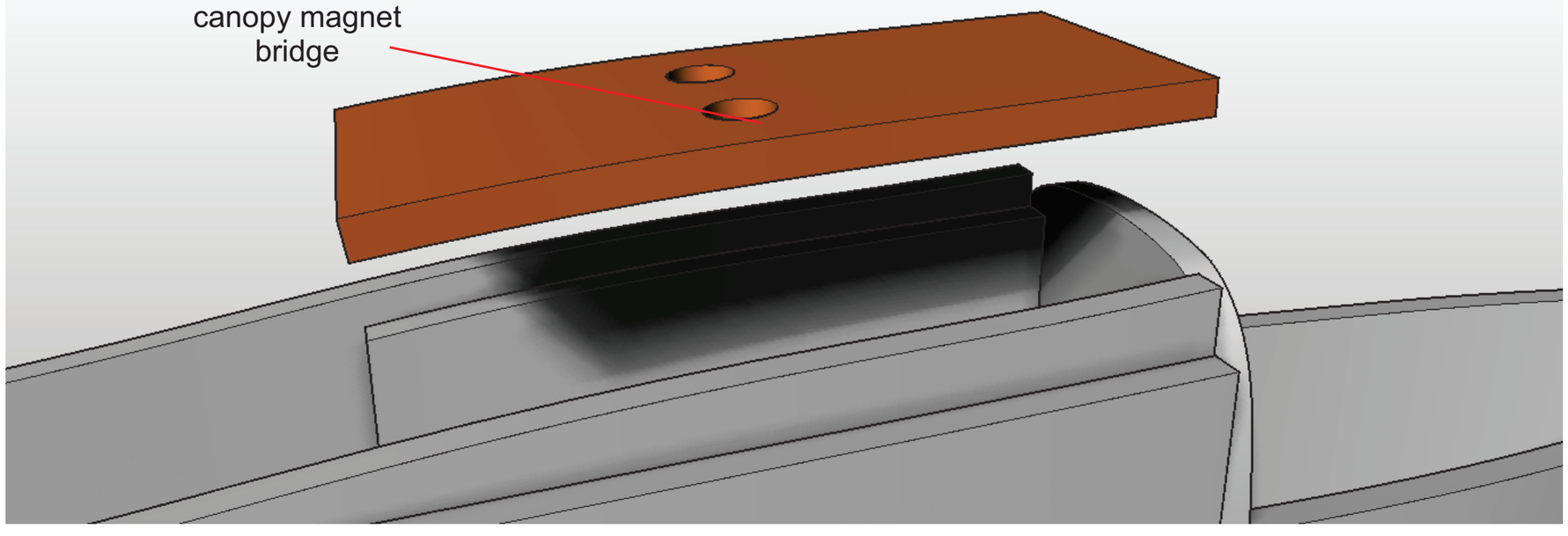

Gently curve, then Glue the **Dual Cockpit canopy magnet bridge** in place.

All versions

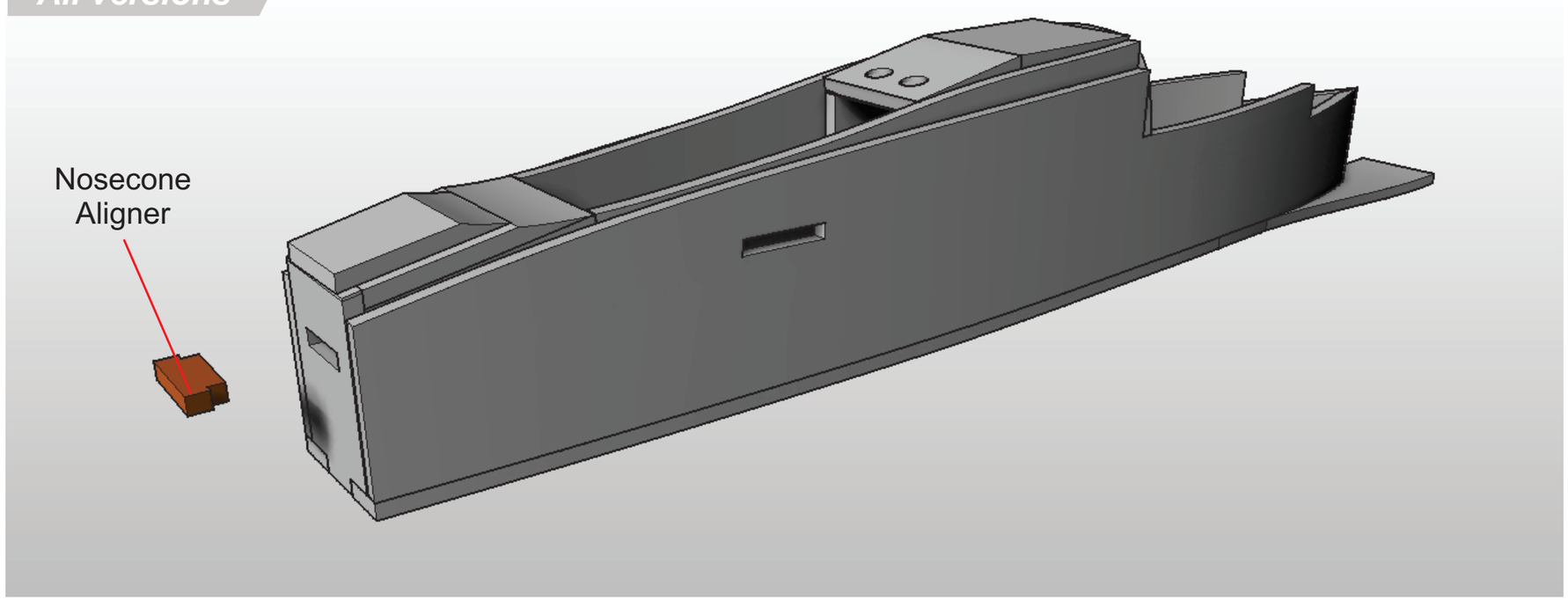

Glue the **Nosecone Aligner** in place.

All versions

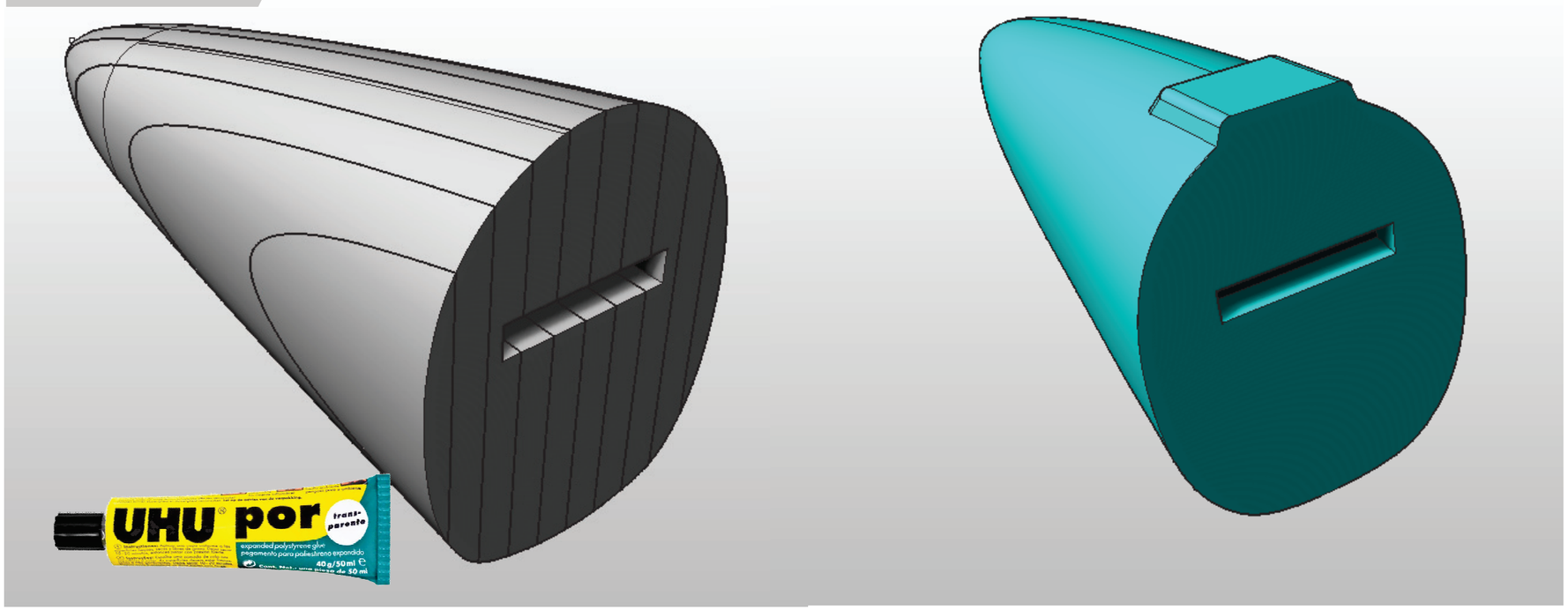

Create either a 3d printed Nosecone or a nosecone consisting of layers of foam sanded to get the right shape, by removing the ‘mountains’ until the ‘valleys’ are no more.

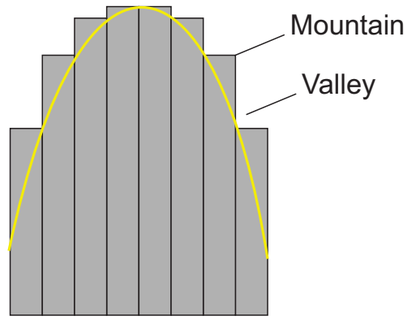

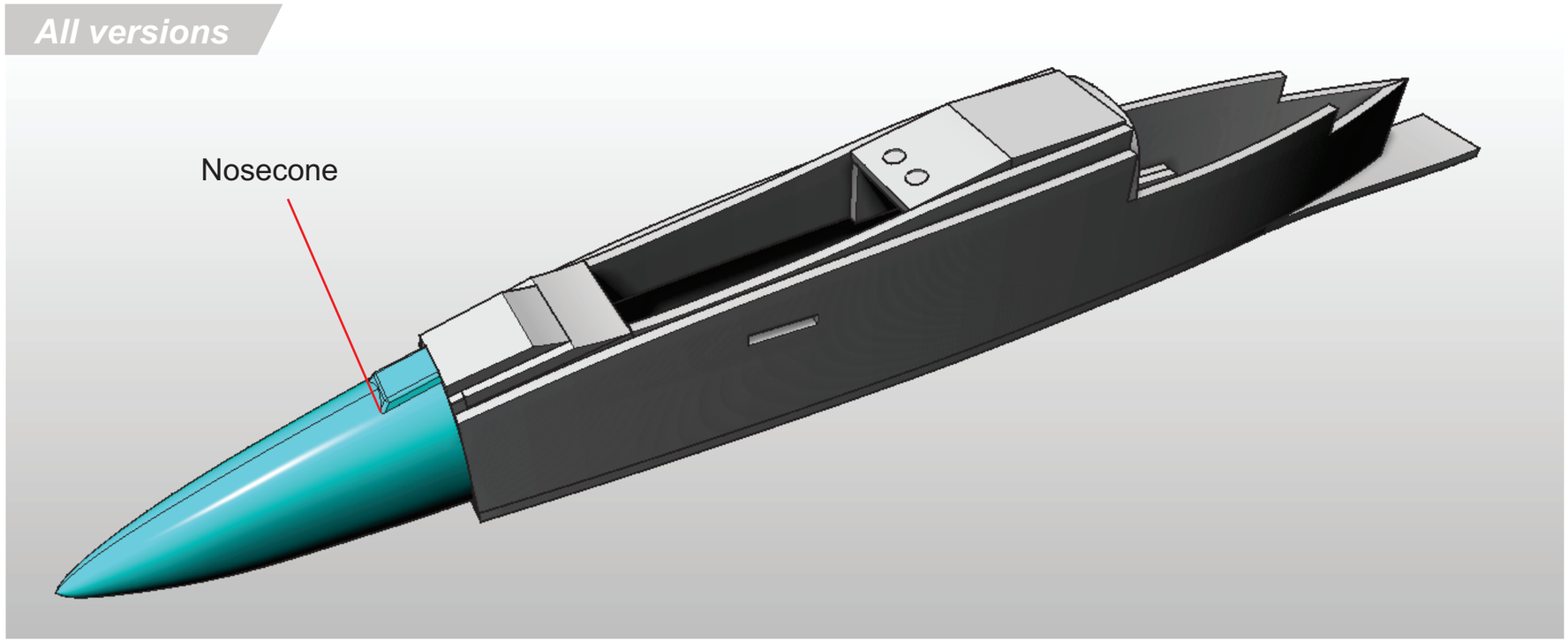

Glue the **Nosecone** in place using the aligner to position correctly

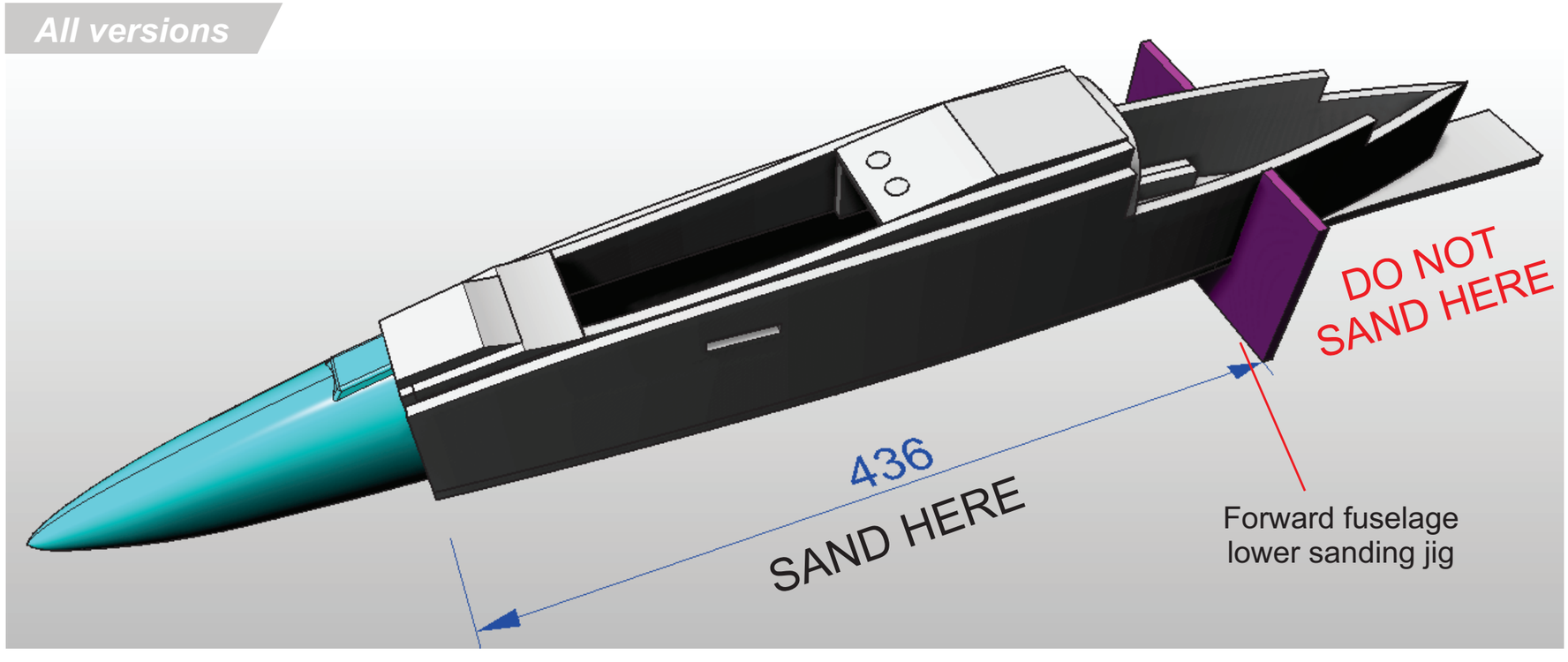

Sand the lower corners of the forward fuselage between the nosecone and the sanding JIG positioned as shown.

DO NOT sand rear of the sanding jig as this will be glued to the rear part of the assembly

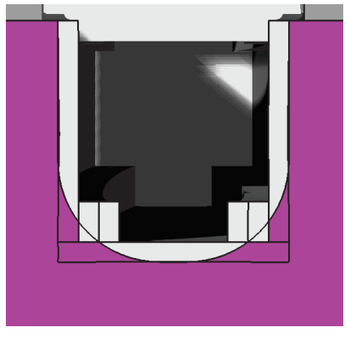

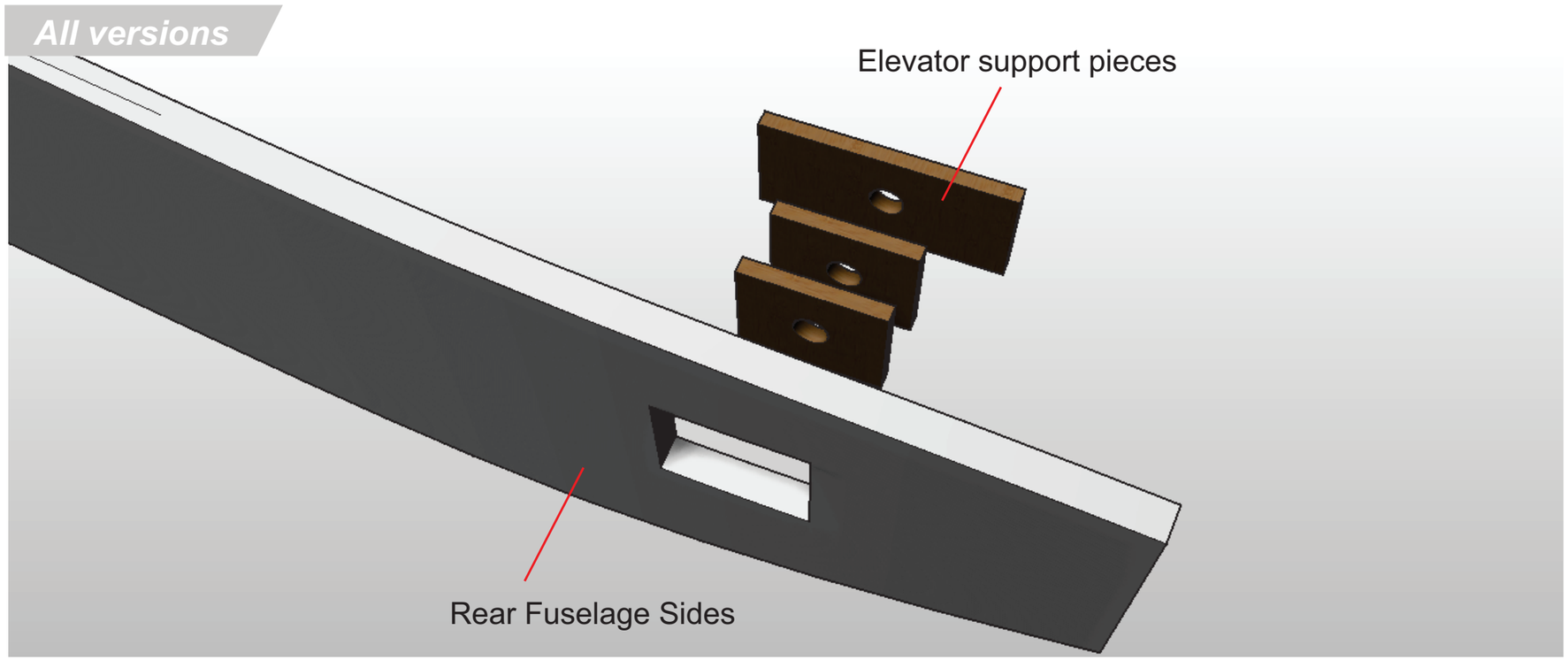

Gently curve the **Rear fuselage sides** to match the rear fuselage belly shape.

Glue together the 3mm liteply elevator support pieces, and then on to both the rear fuselage sides

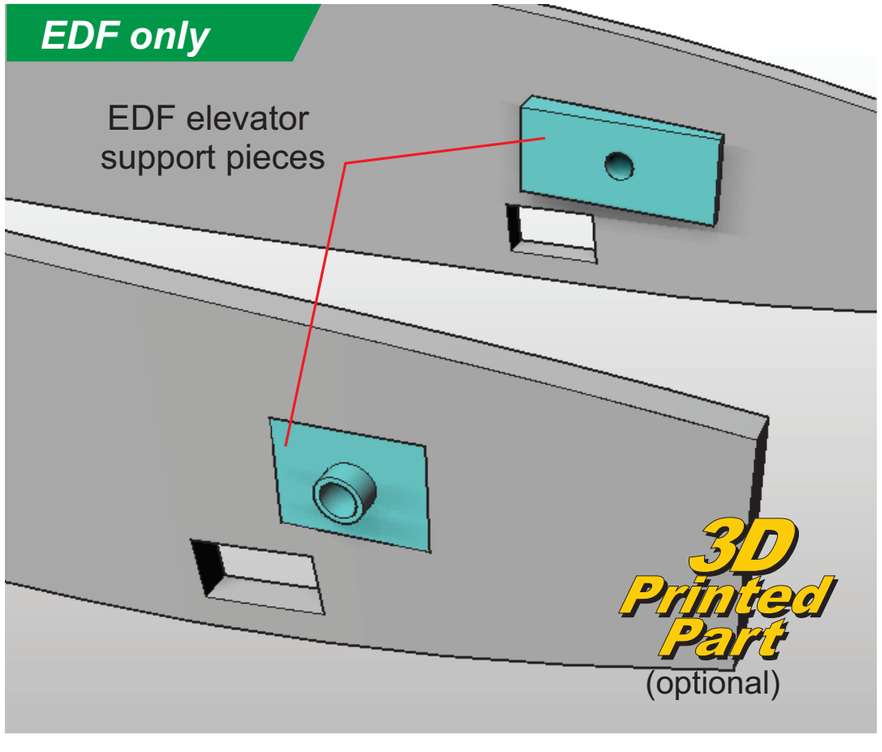

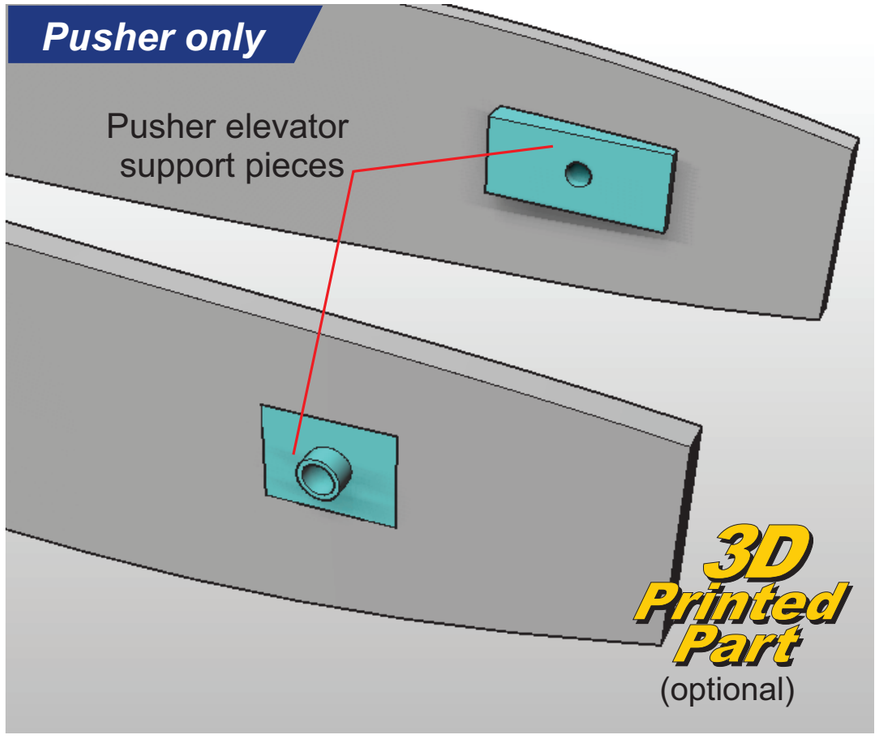

Alternatively, 3D print either the EDF or Pusher elevator supports and glue in place.

(The hole sizes in the EDF / Pusher versions are different)

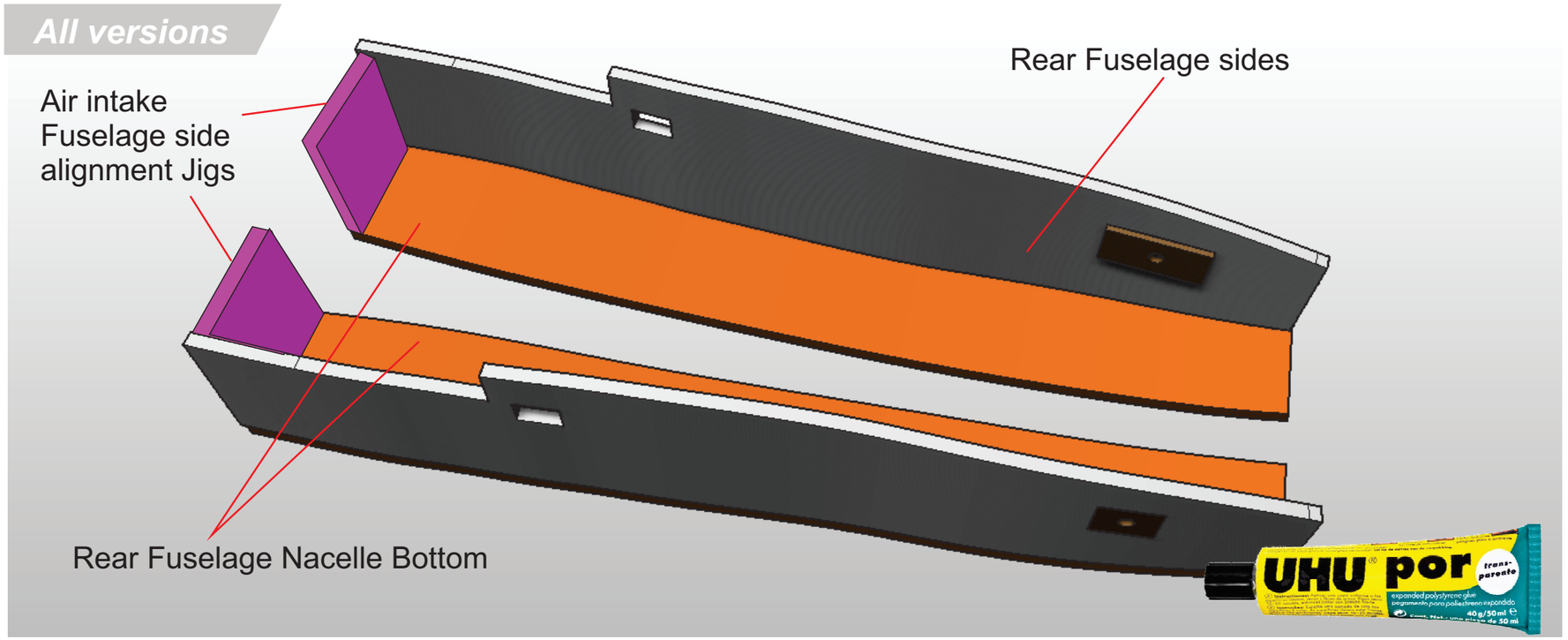

Mark on the rear fuselage sides if you are intending to use 3d printed air intakes.

Glue the **Rear Fuselage sides** and **Rear Fuselage nacelle bottoms** together.

Use the jigs to get the correct angle. do not glue but leave them in throughout the build and remove before you put the air intakes on.

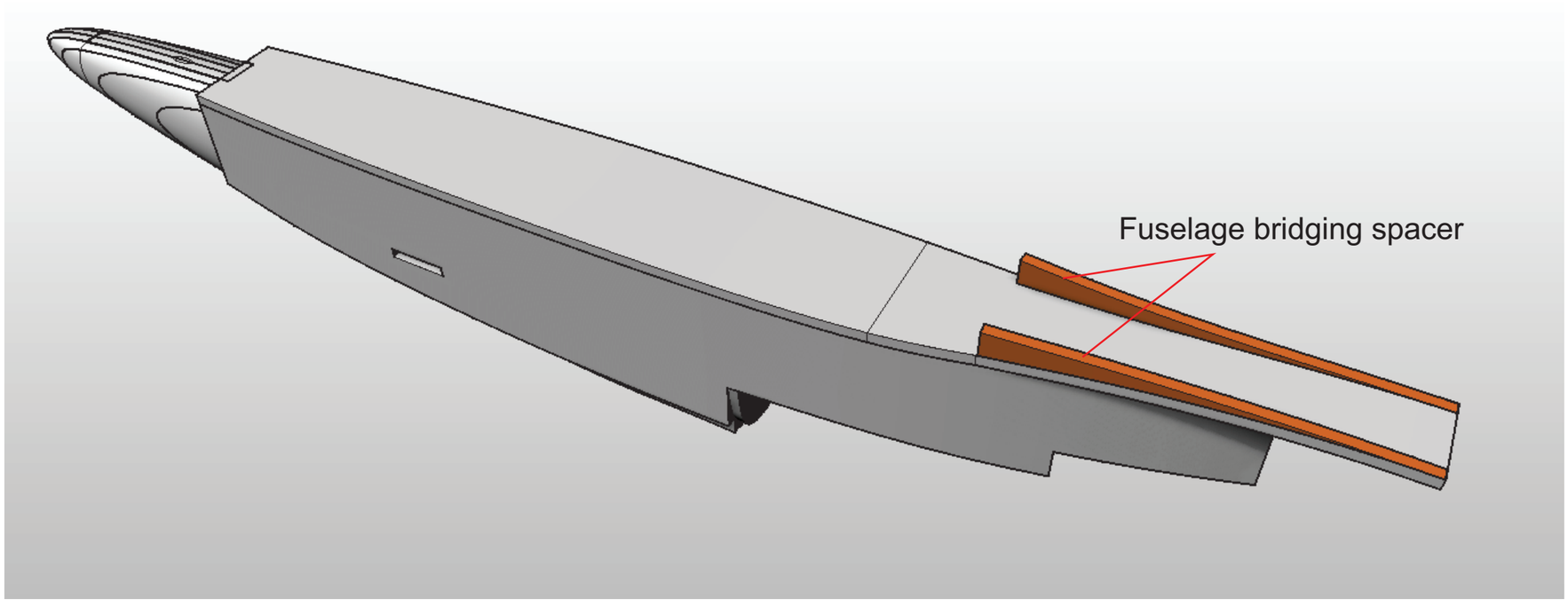

Cut the **Fuselage bridging spacers** wider than the actual finished size, glue onto the fuselage then sand the final shape.

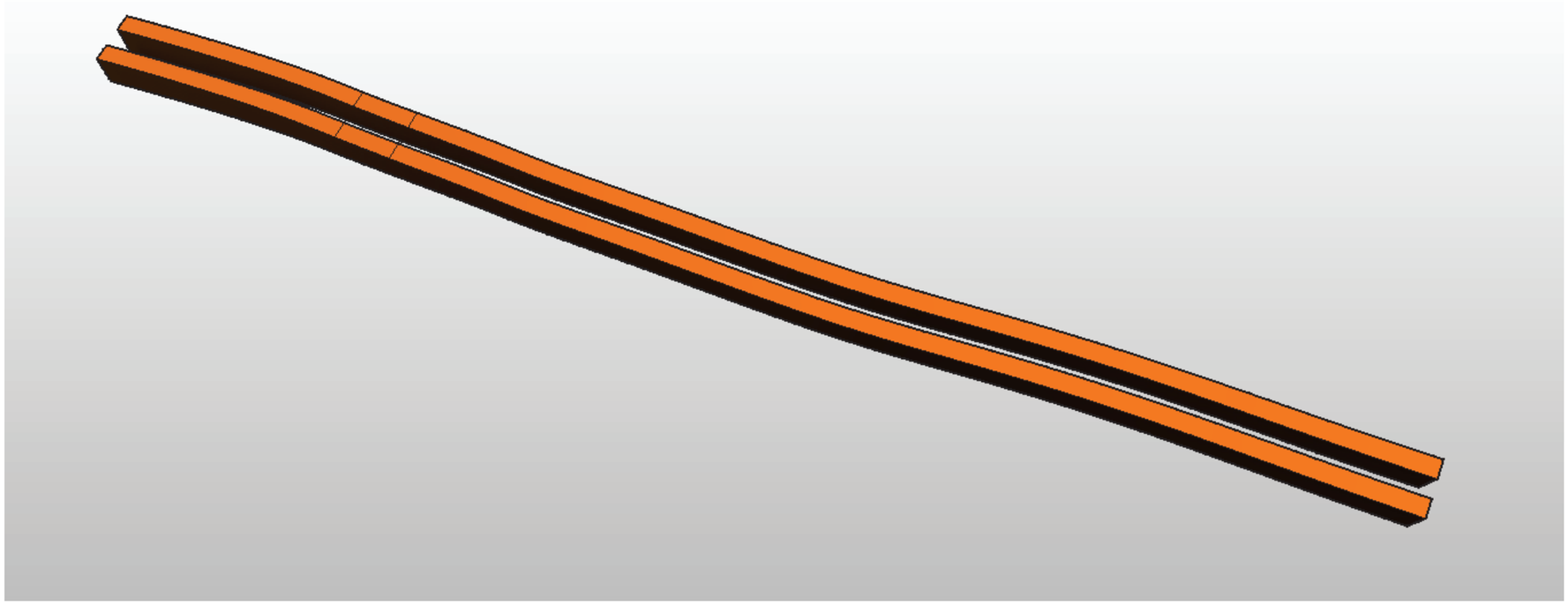

Glue the two pairs of **Aft Lower Fuselage corner reinforcers** together

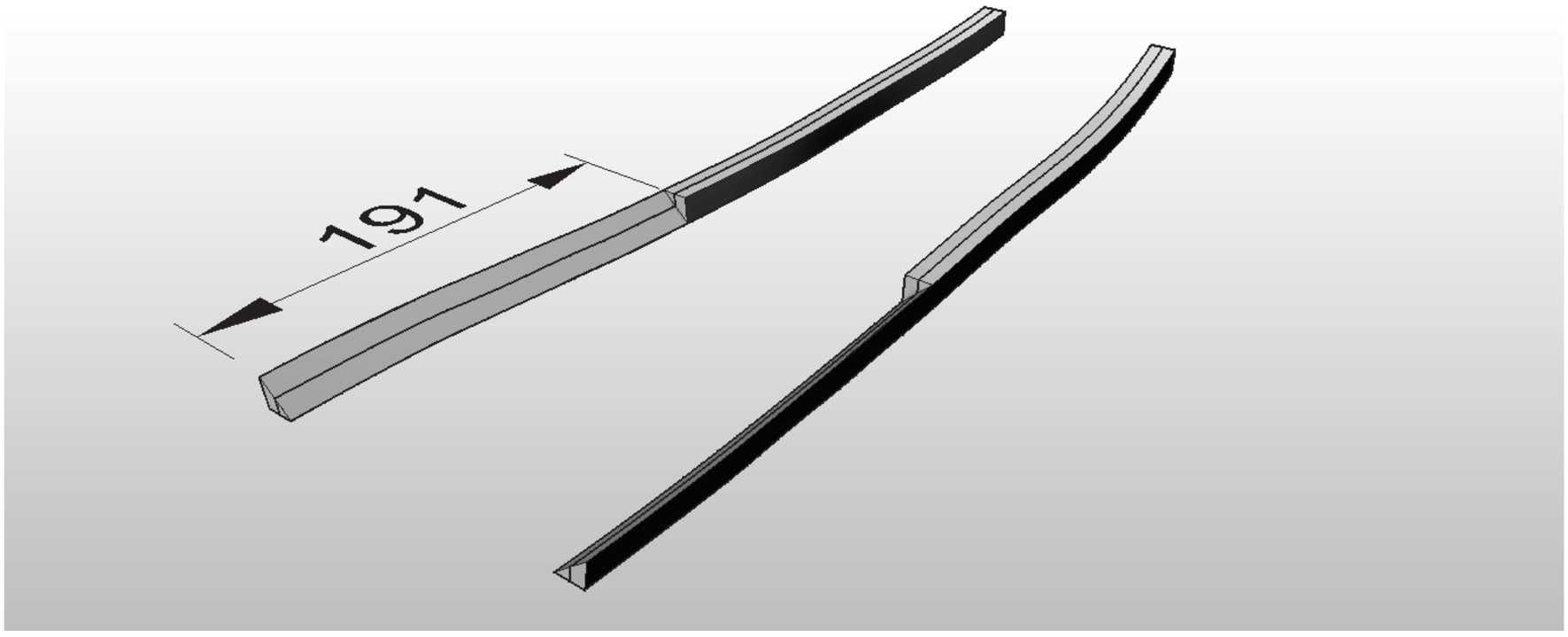

Using a sharp knife and sandpaper trim away the **corner reinforcers** as shown

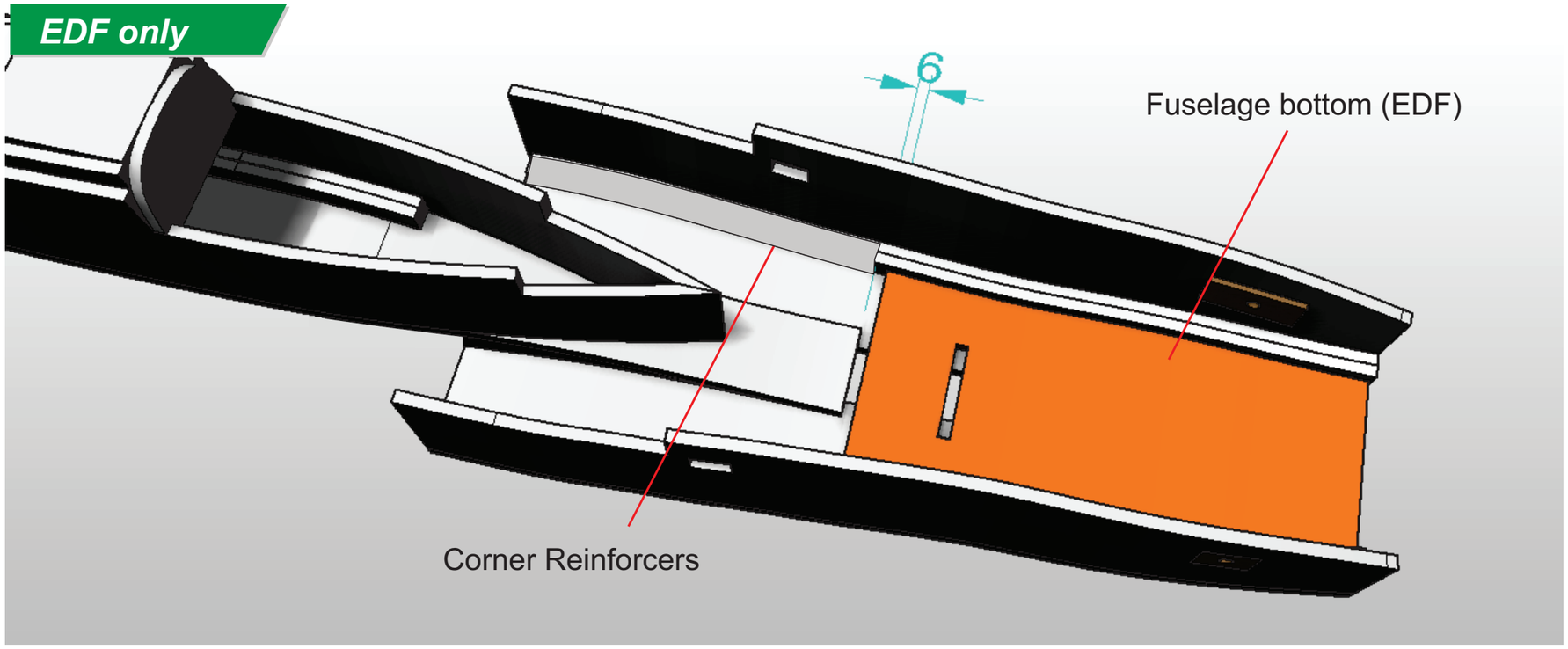

EDF version

Glue the **Corner reinforcers** onto the assembly then glue the **Fuselage bottom** to the assembly as shown leaving a gap wide enough for the **Forward EDF bulkhead** to sit in

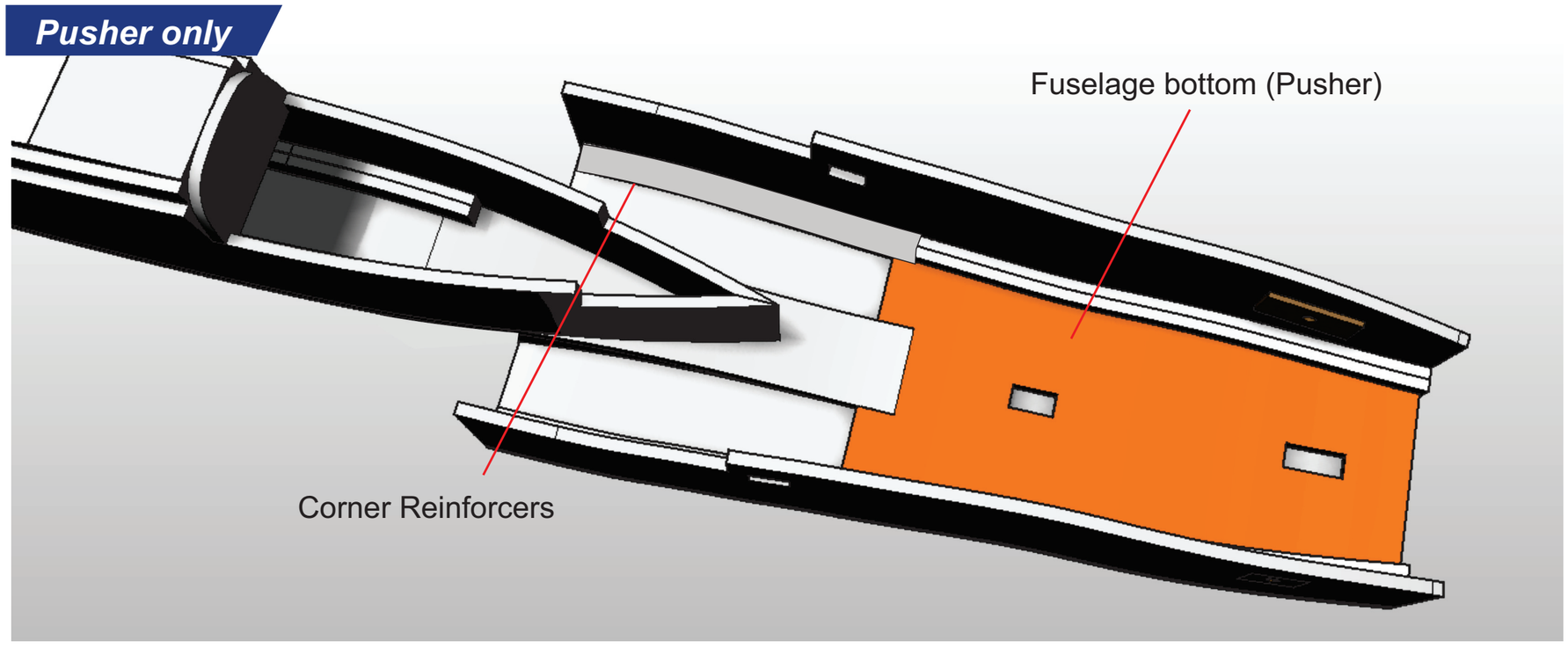

Pusher version

Glue the **Corner reinforcers** onto the assembly then glue the **Fuselage bottom** to the assembly as shown.

The parts should interlock.

Pusher only

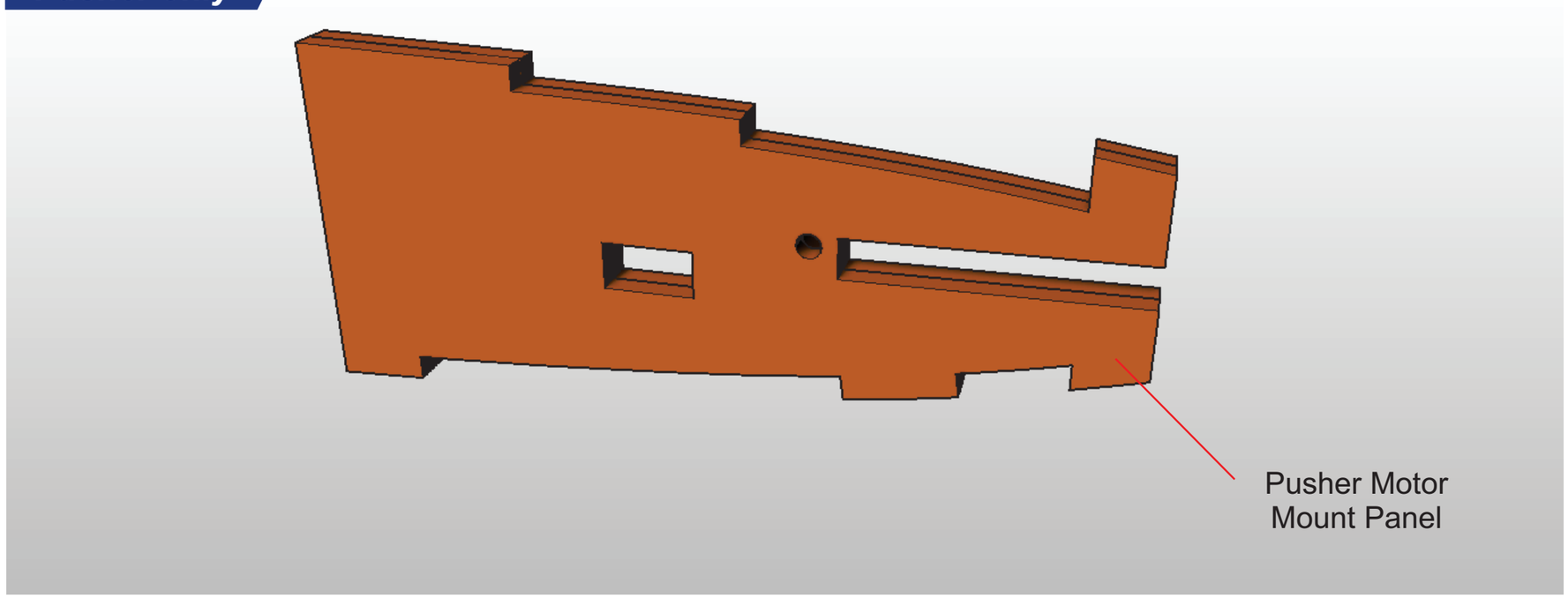

Glue the two pieces of the **Pusher motor mount** together

EDF only

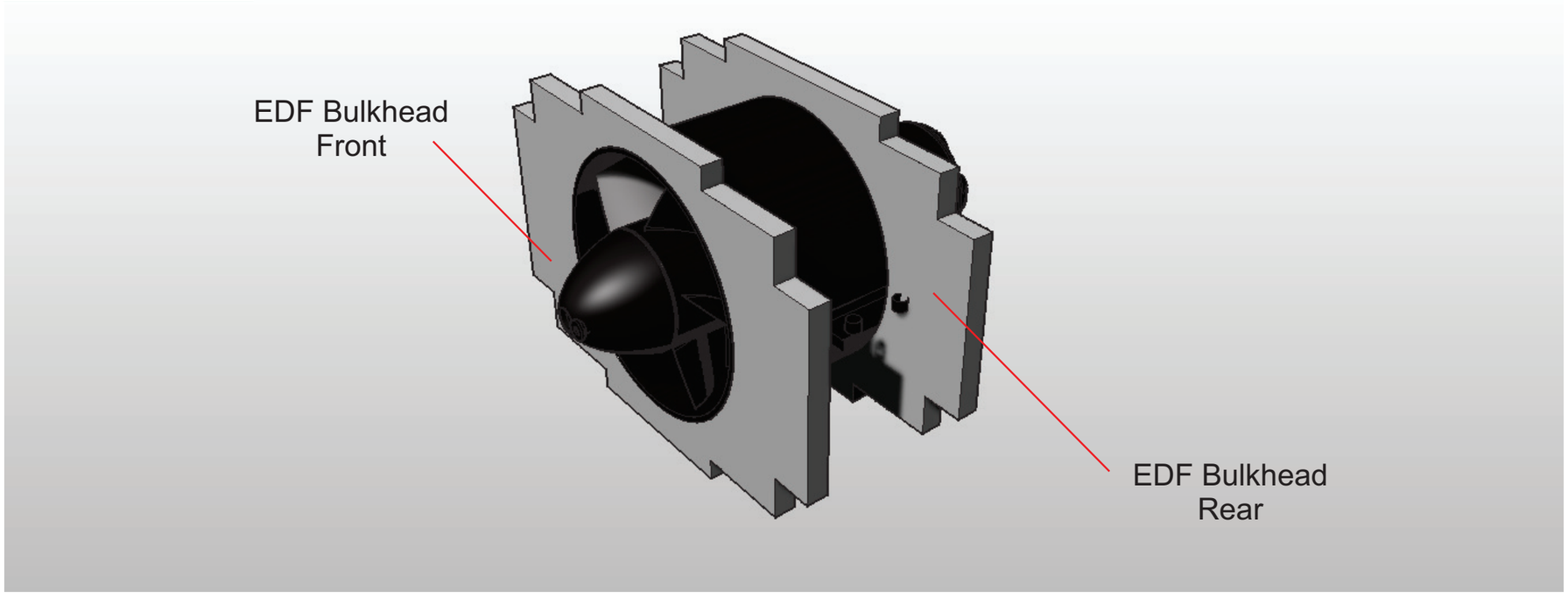

Dry fit the two EDF bulkheads to fit your chosen EDF unit.

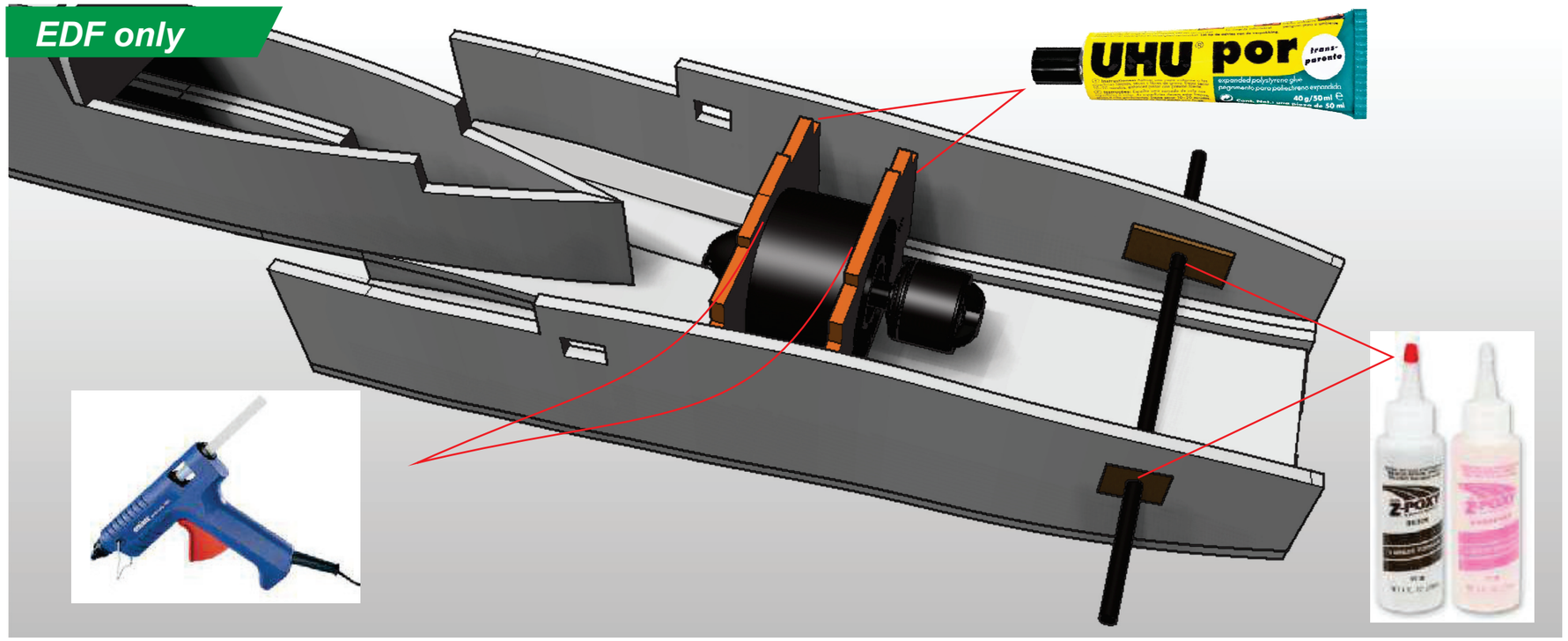

Dry fit the EDF bulkhead assembly into the fuselage, then glue in place using UHU por and Hot melt glue

Thread a single carbon rod through the two elevator supports on the fuselage leaving the correct lengths either side. Drill out if necessary to ensure a good fit.

Glue in place using Epoxy

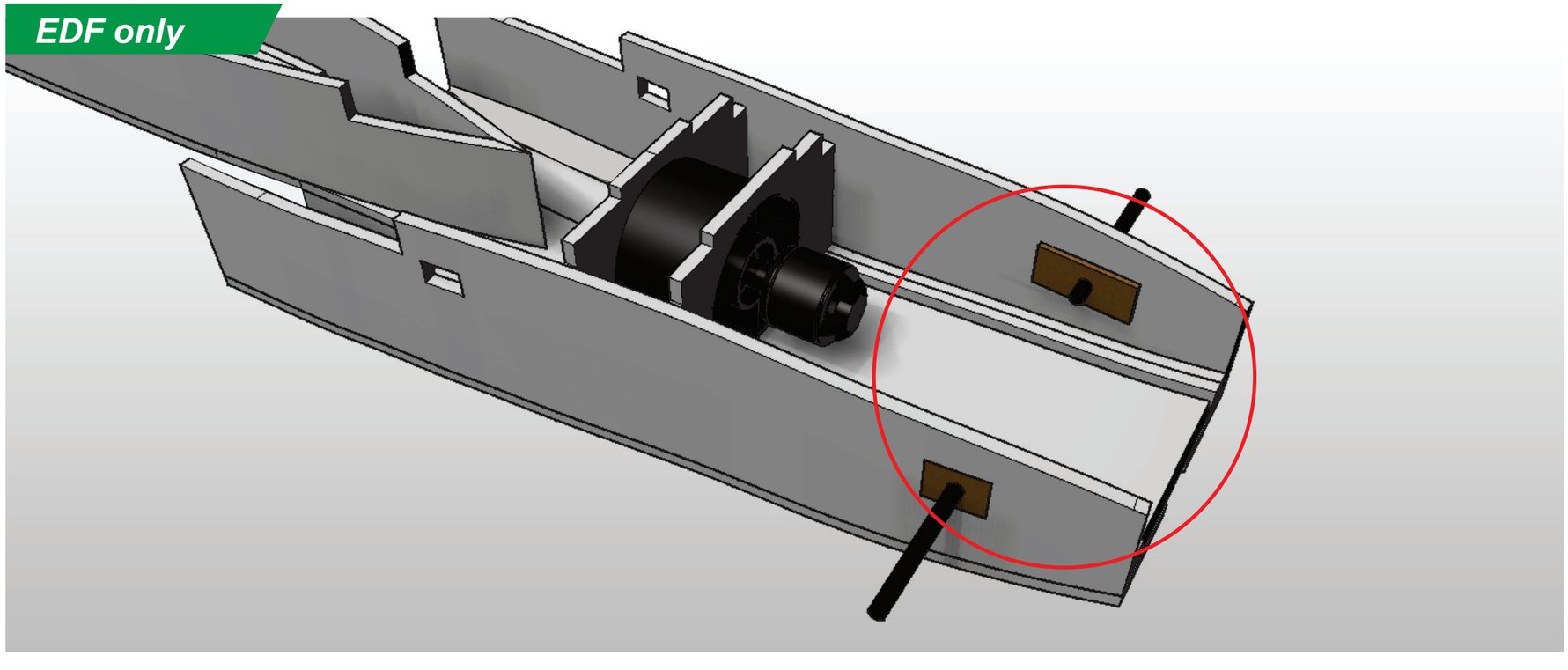

When the epoxy has set, trim away the middle section of the carbon as shown.

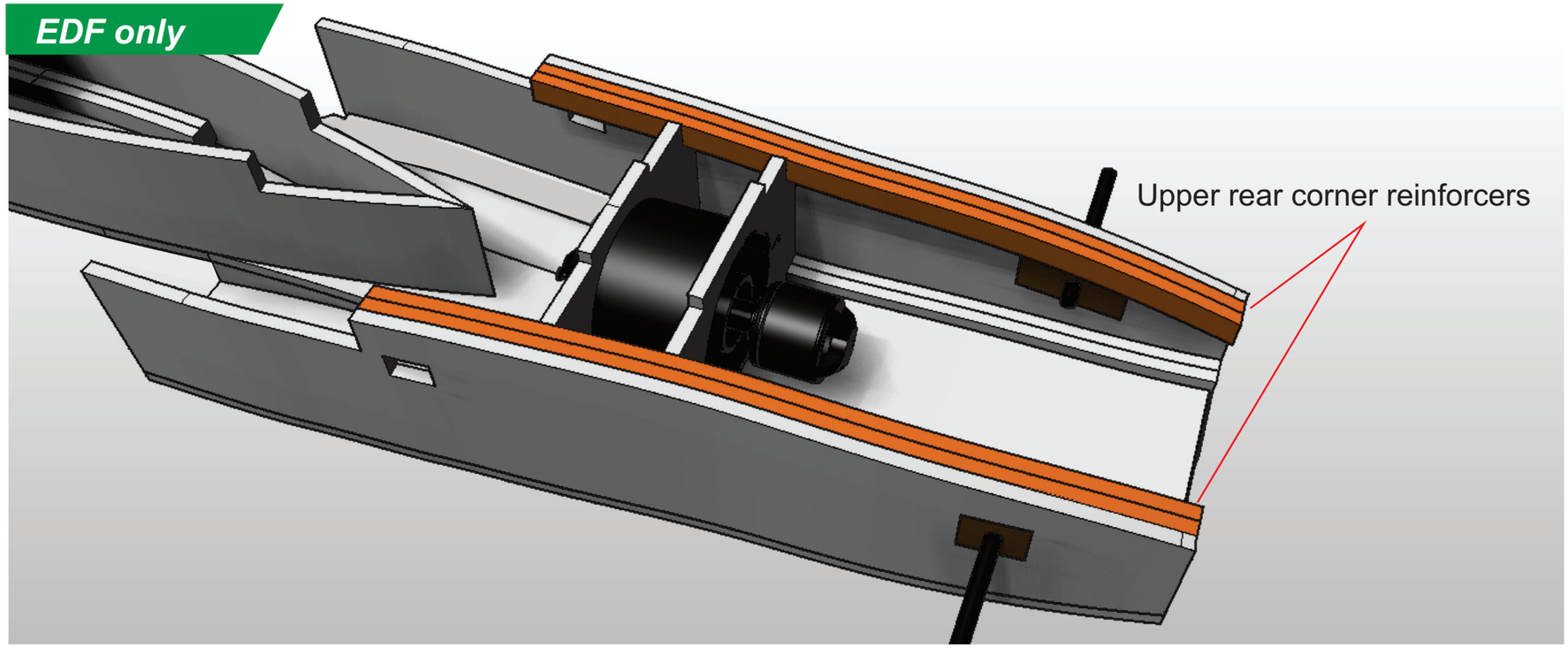

Glue the **Upper rear corner reinforcers** in place as shown

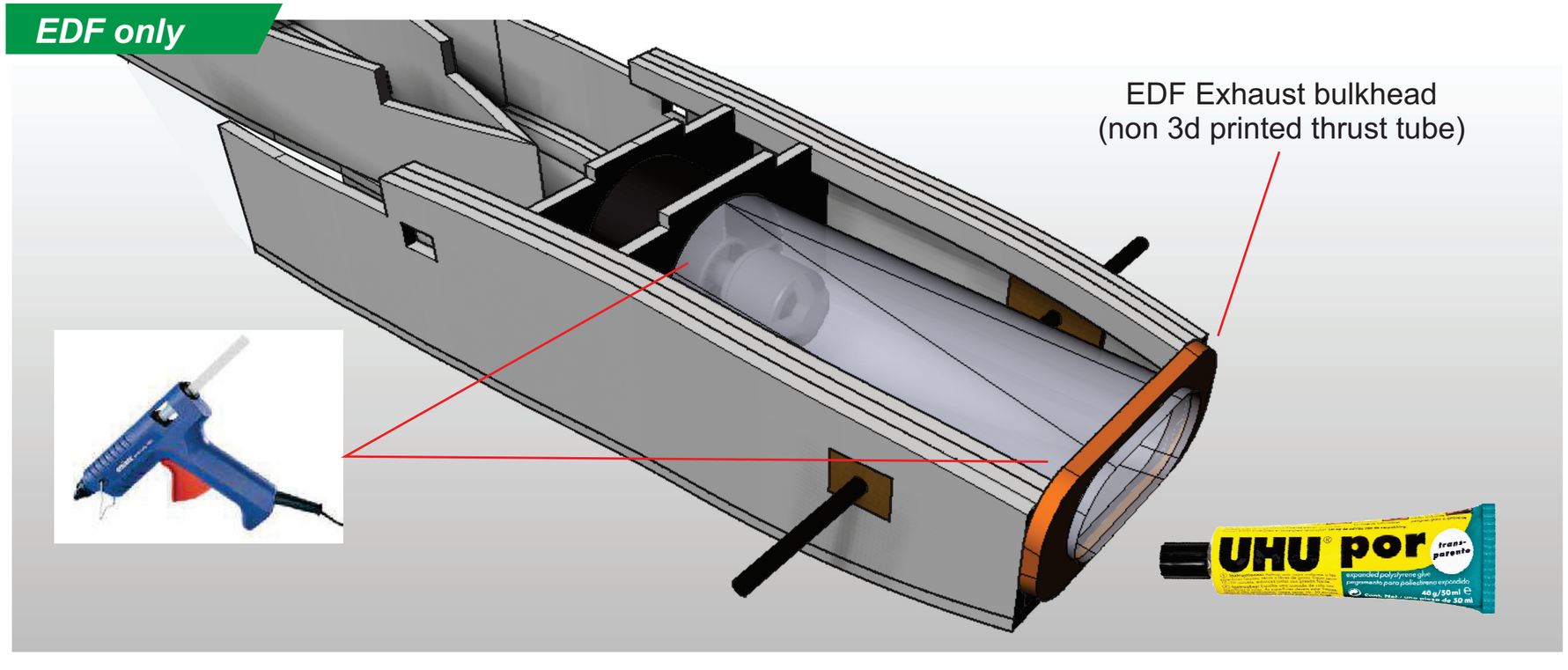

If you are not using 3D printed parts, use 0.5mm plastic sheet to form the EDF thrust tube, taped together using nylon reinforced tape.

Make the **EDF exhaust bulkhead** from 2x lite-ply and glue in place using UHU por.

Glue the thrust tube in place carefully using hot melt glue, run the EDF motor cables upwards.

EDF only

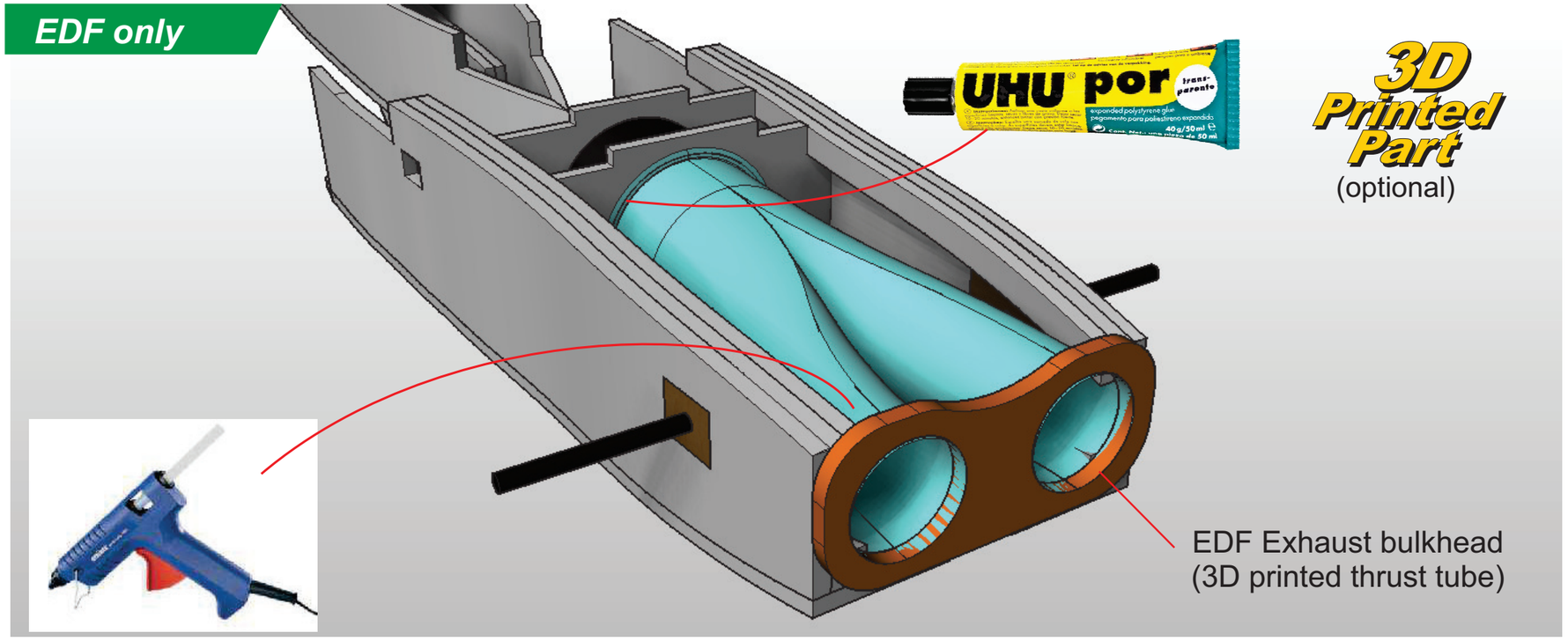

If you are using the 3D printed thrust tube, glue the flange to the rear EDF bulkhead using UHU por.

Glue the EDF Exhaust bulkhead (3D printed thrust tube) to the assembly around the ducting. Glue the ends in place using a few drops of hot-melt glue

Pusher only

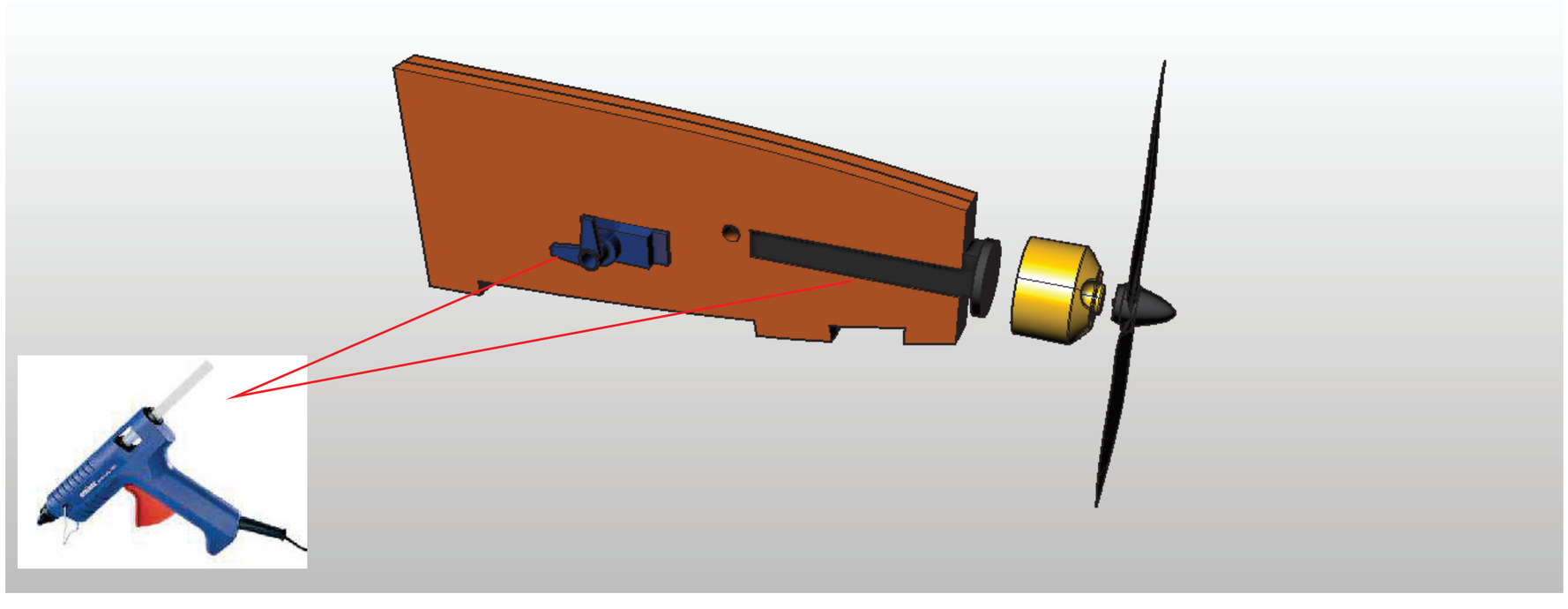

Glue the elevator servo in place.

Glue the motor mount in place. Either use the Hobbyking - SKU: OR004-00602 or 3d print one from the www.Jetworks.online website.

Attach the motor to the motor mount.

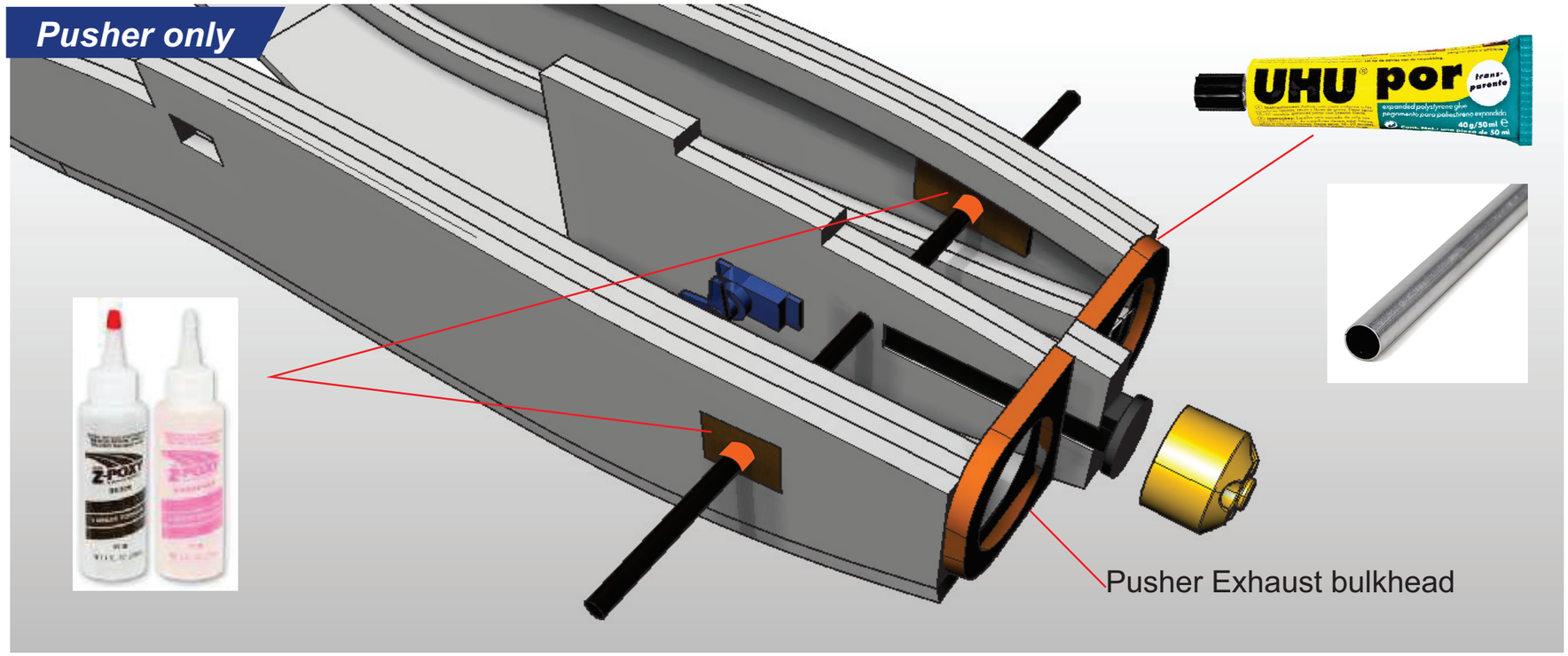

Drill out the plywood elevator supports to take two 10mm long aluminium tubes.

Feed the carbon elevator shaft through the tubes to set the correct angle.

Apply masking tape to the ends of the aluminium tubes then glue them to the fuselage using epoxy.

Glue the two parts of the **Pusher exhaust bulkhead** to the assembly.

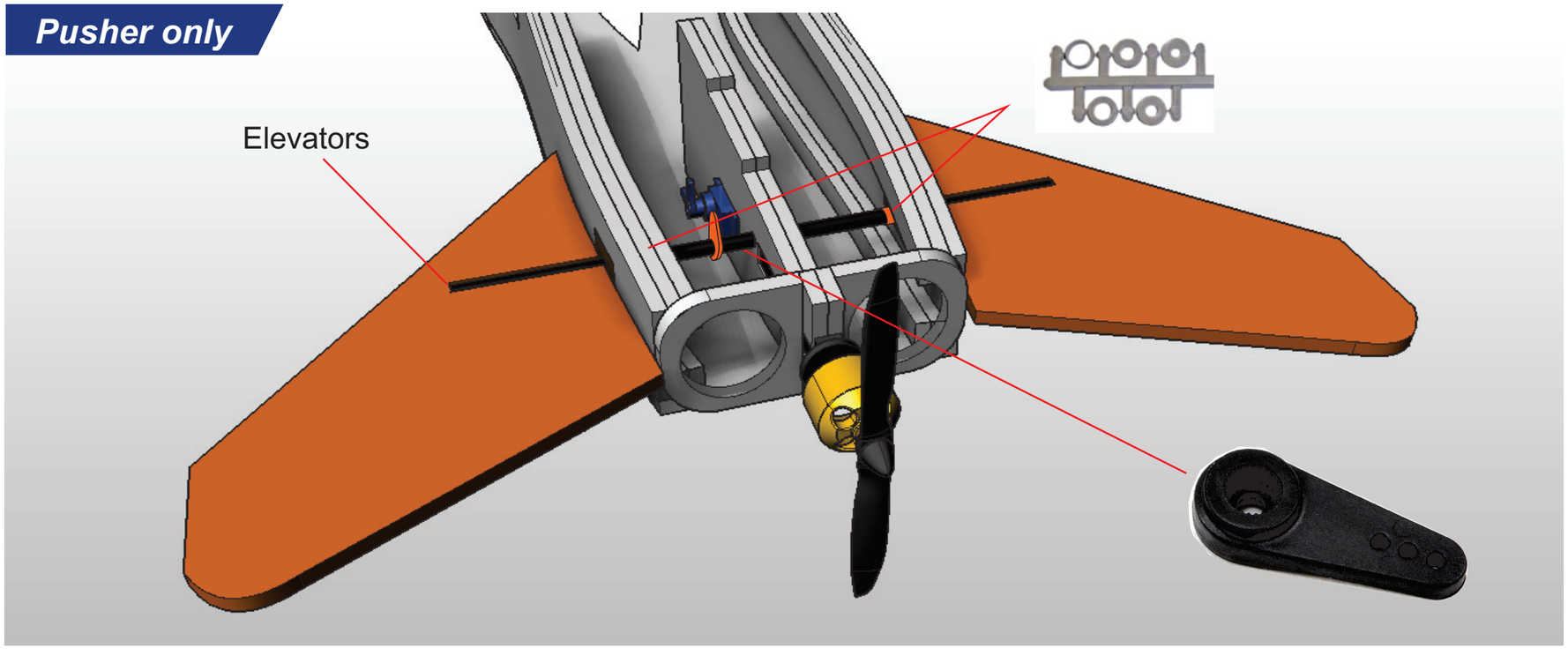

Remove the masking tape. Slide out the elevator shaft

Drill out a standard size servo horn and then reassemble the shaft with the horn in line with the already fitted servo horn.

Use 2x prop adaptor rings on the shaft to prevent the shaft from sliding.

Attach the **Elevators** using epoxy and masking tape, supporting in place whilst the glue sets.

EDF only

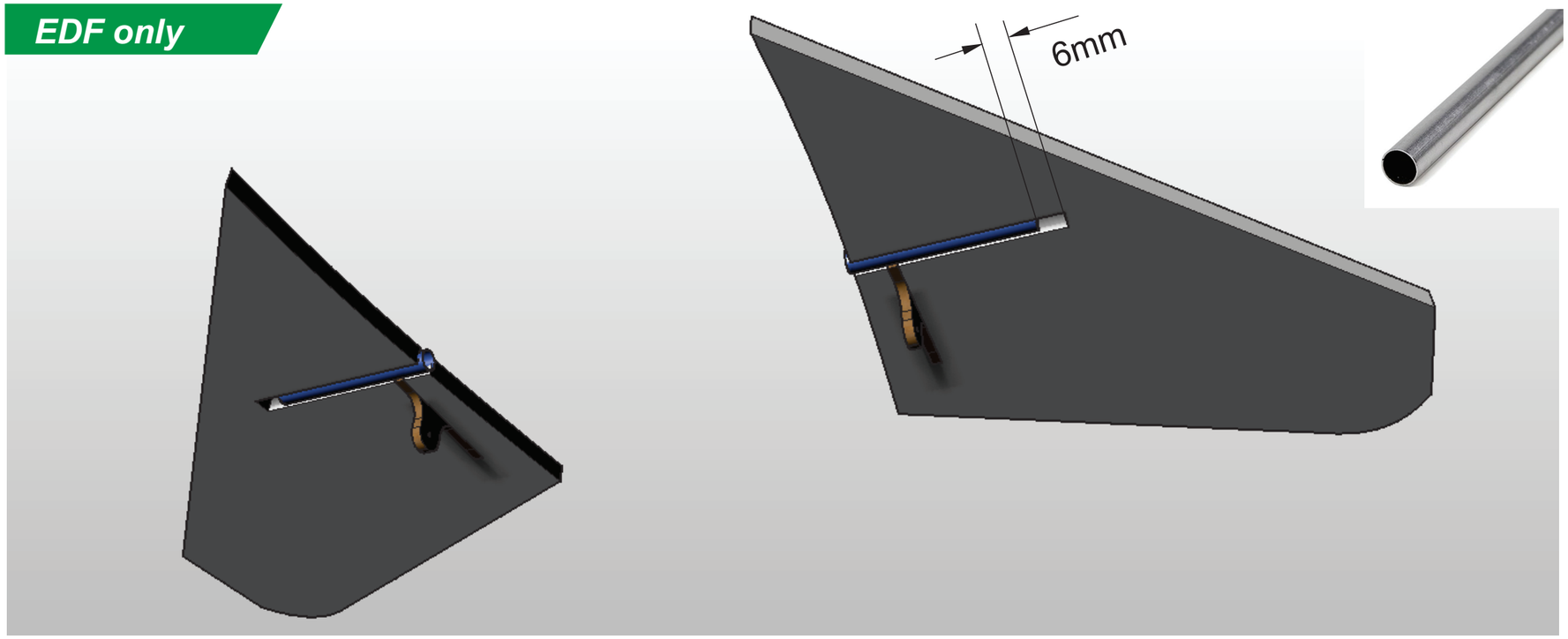

Glue the Aluminium tube in place within each elevator as shown, leaving a 6mm gap at the end.

Glue the two 3mm lite-ply control horns in place as shown.

EDF only

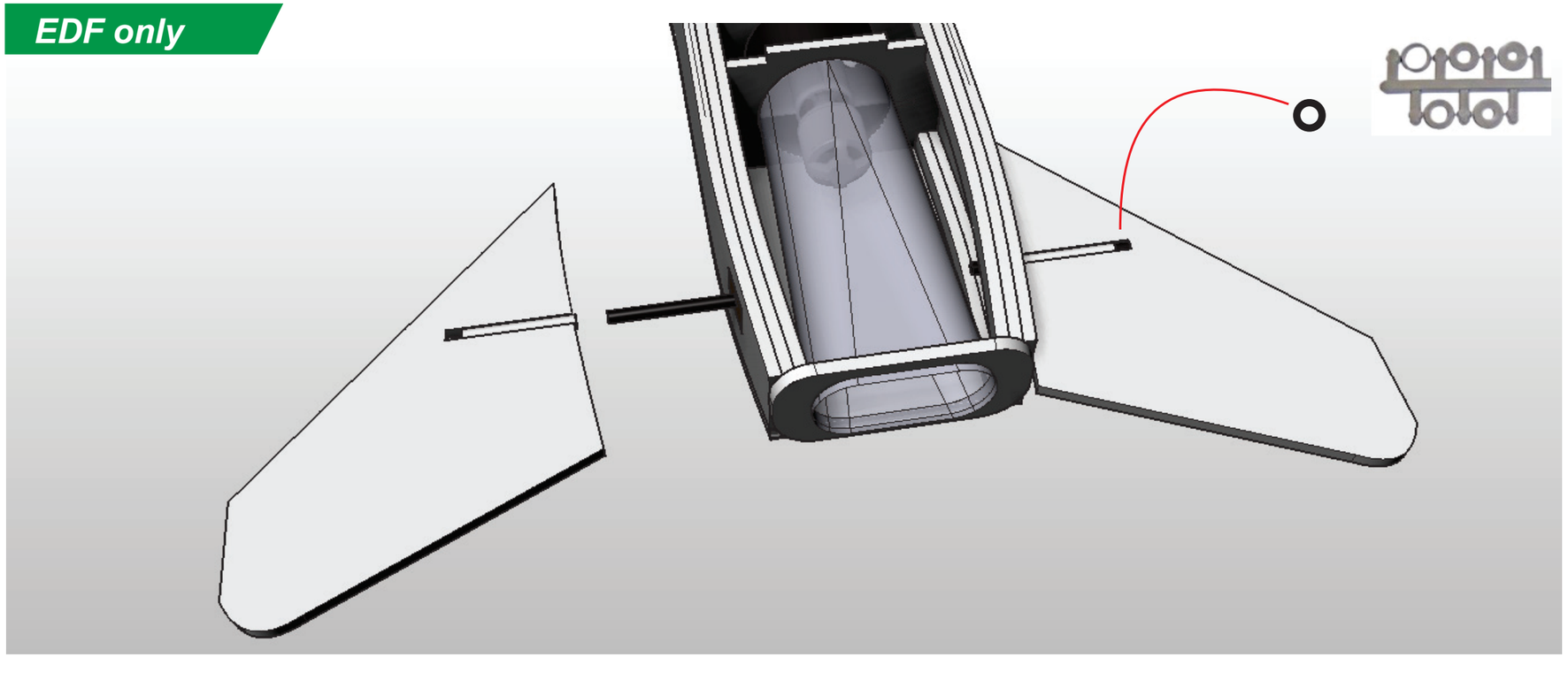

Slide the elevators onto the assembly, pin in place by sliding drilled out prop adaptors onto the carbon shafts.

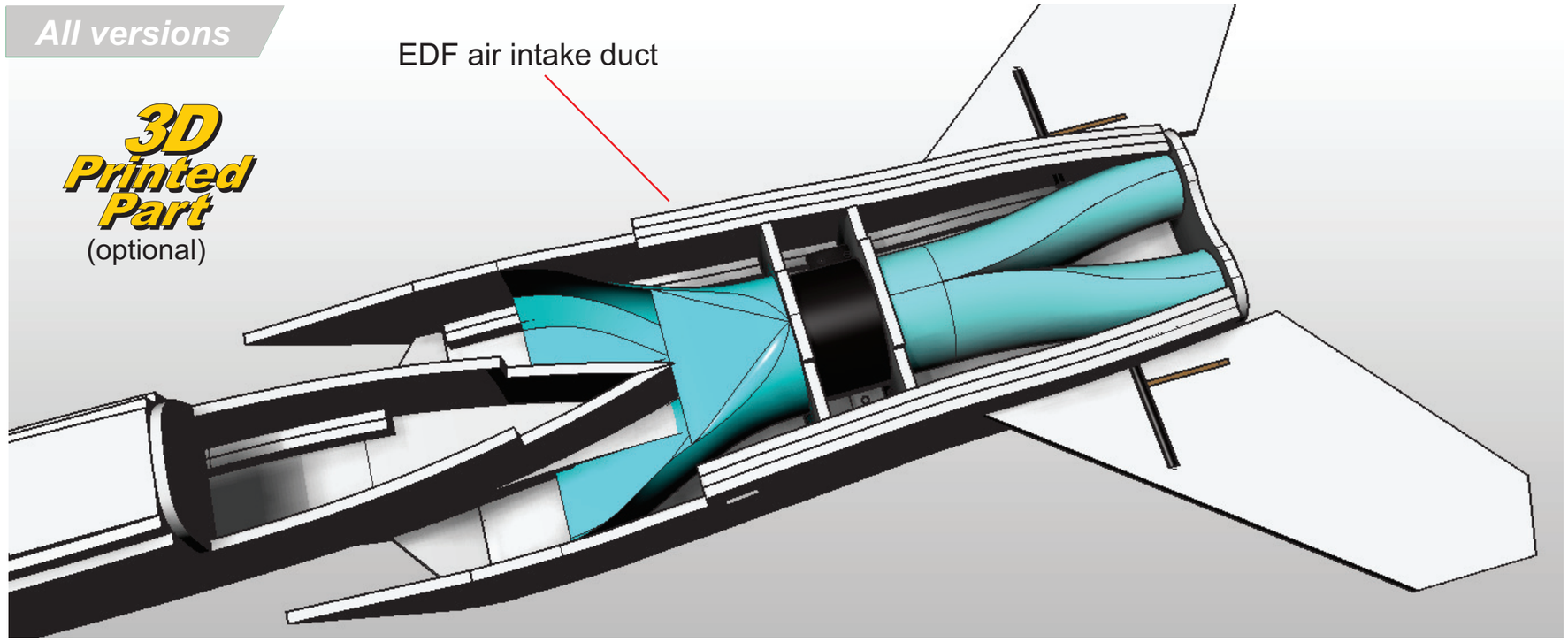

Chamfer the inside edge of the lower corner reinforcement pieces.

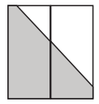

If you have a 3D printer, create the **EDF air intake duct** and glue in place.

Alternatively, fabricate an air intake ducting using 3mm depron

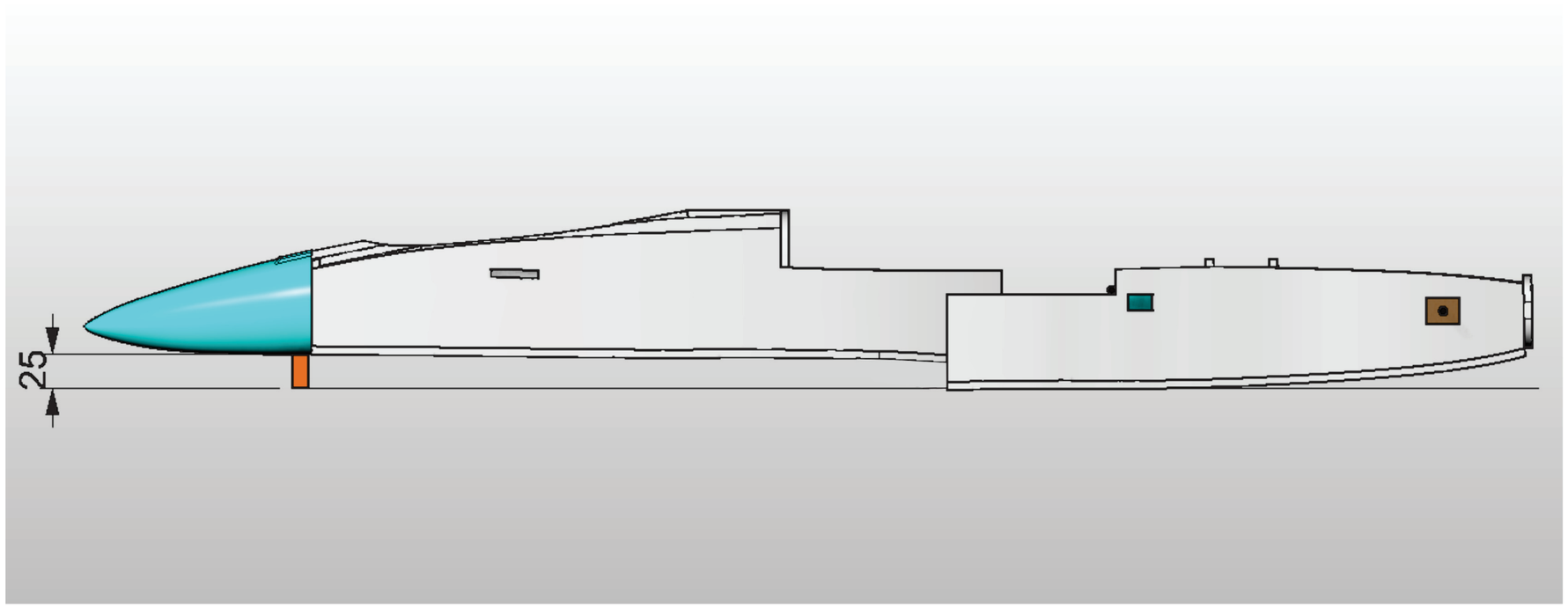

Before attaching the wing, ensure that the fuselage is straight in plan view.

Also put a supporting piece of 25mm wide depron under the nose as shown to ensure that the fuselage is correctly aligned and not bent.

Mark on the underside the fuselage side position

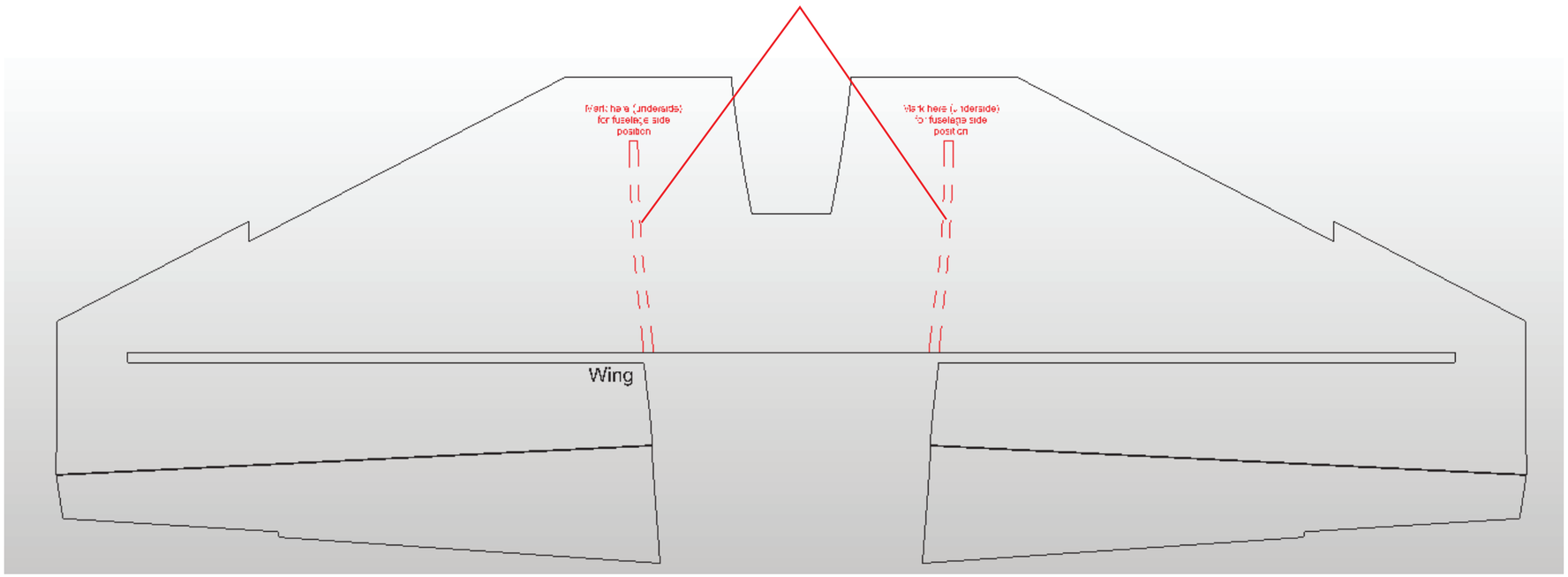

The Lower rear fuselage sides twist outwards towards the air intakes. You will need to mark the intersection on the underside of the wing to help identify the correct location.

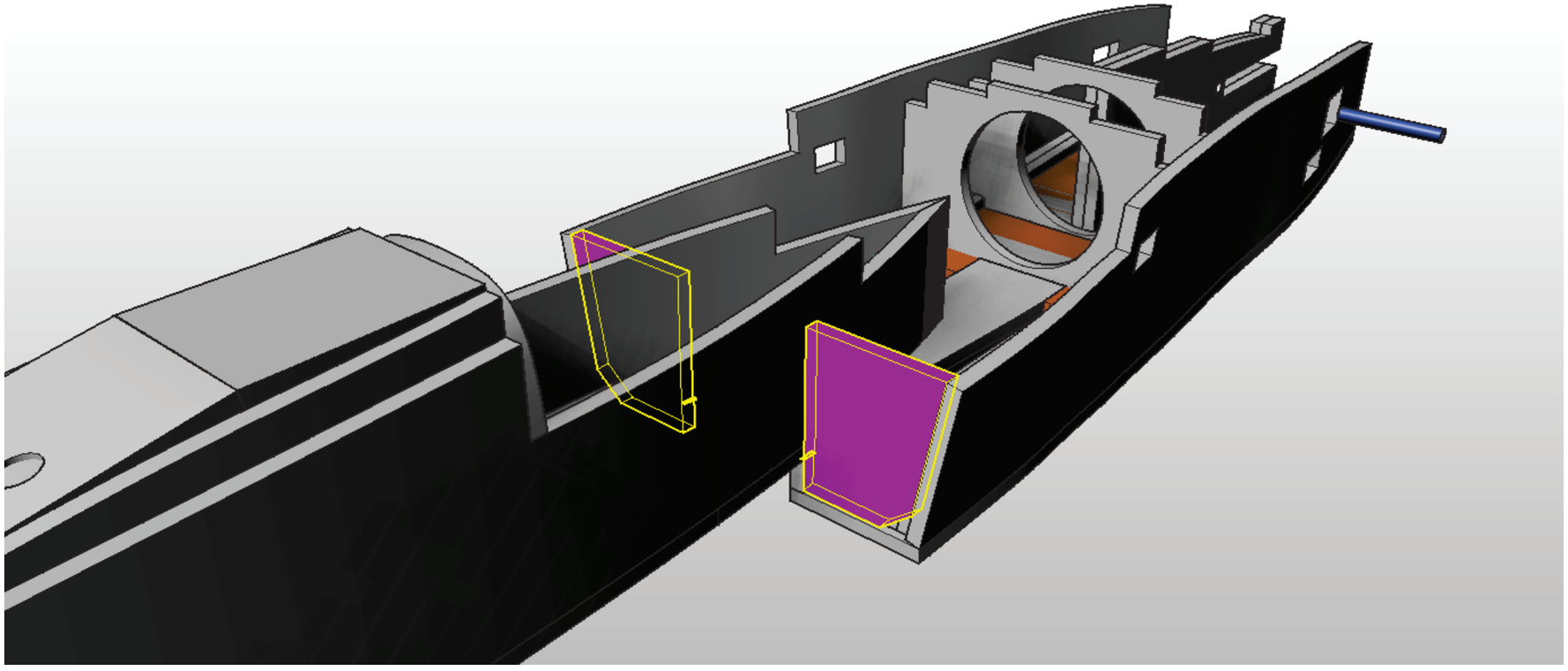

Use the **Air intake fuselage side angle Jigs to hold the fuselage sides** in the correct position - do not glue in place, remove once the wing has been glued in place.

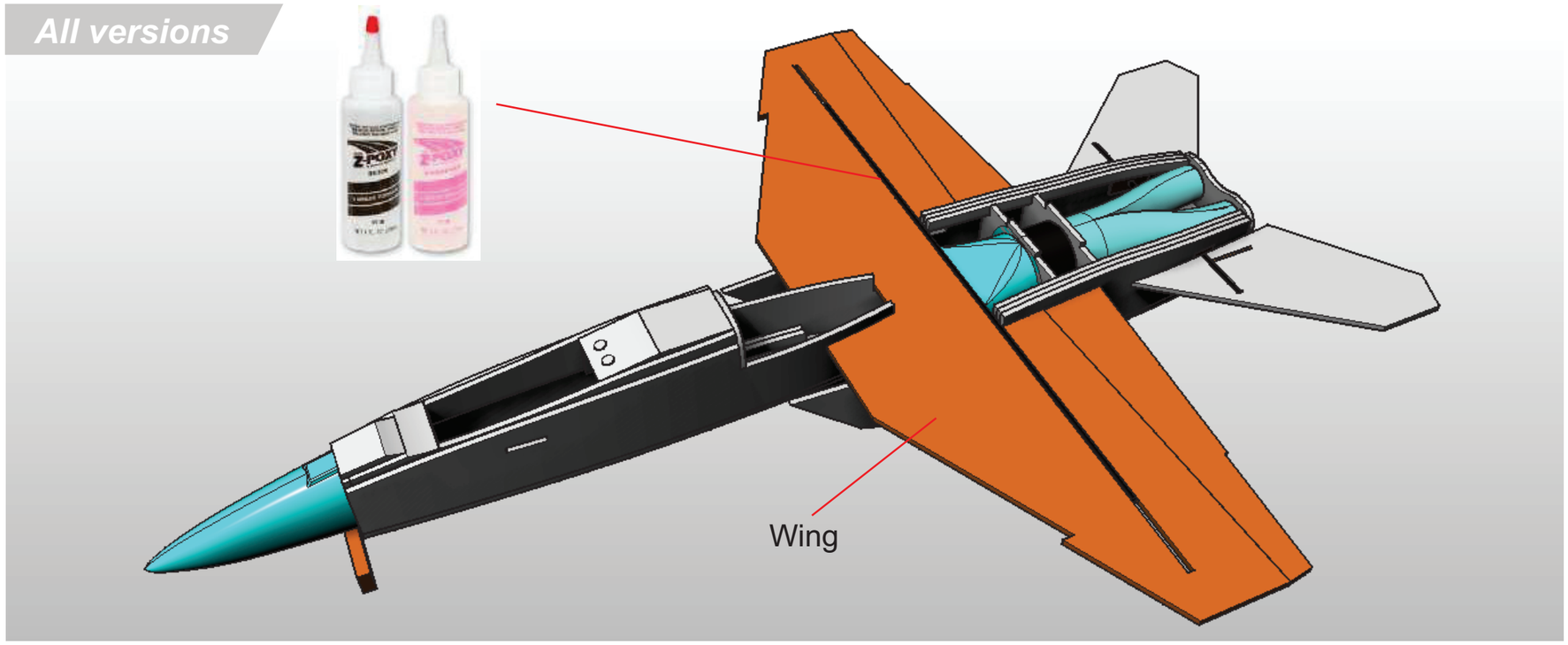

Glue the carbon spar into the **Wing** using epoxy and masking tape, then once set, glue the **Wing** onto the fuselage.

Keep the nosecone support in place

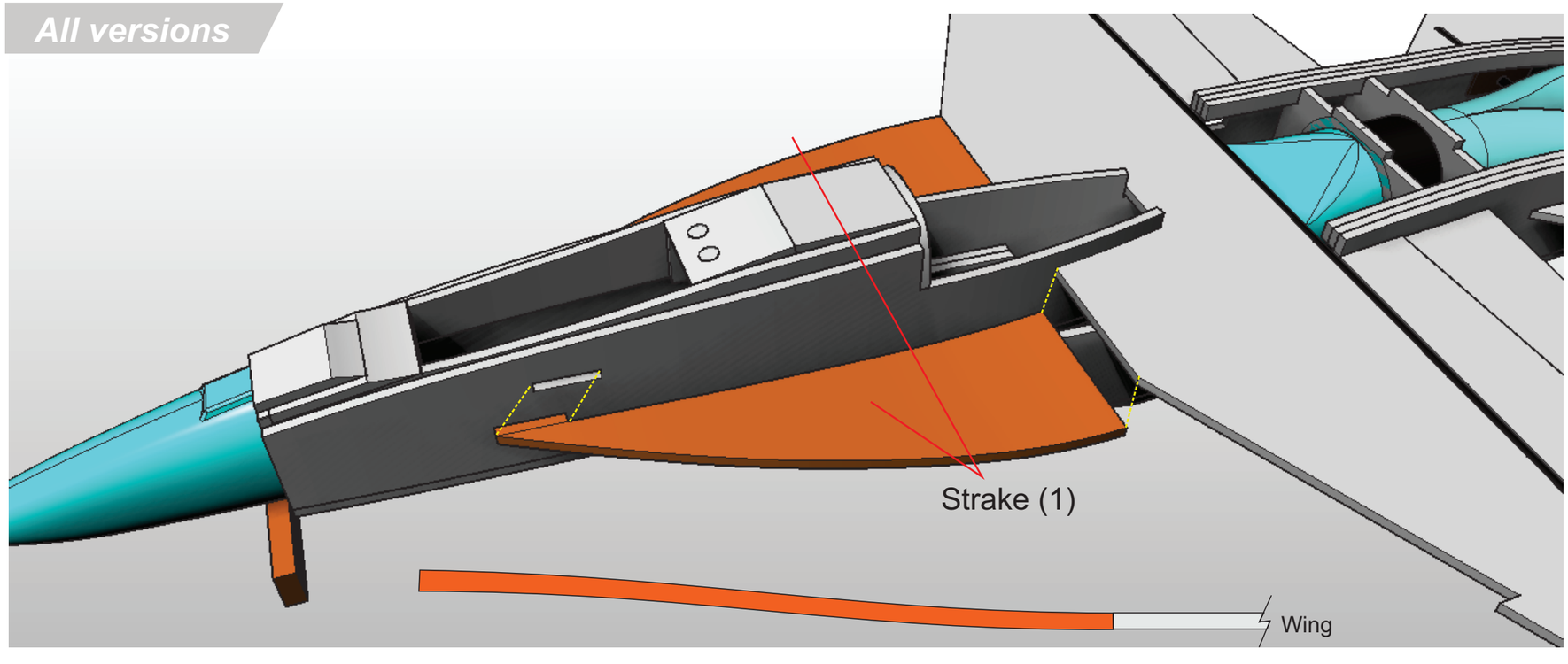

Gently curve the **Strake (1)** to create the shape indicated.

The **Strake (1)** shape should smoothly flow into the wing as shown in the sectional view.

Keep the nosecone support in place

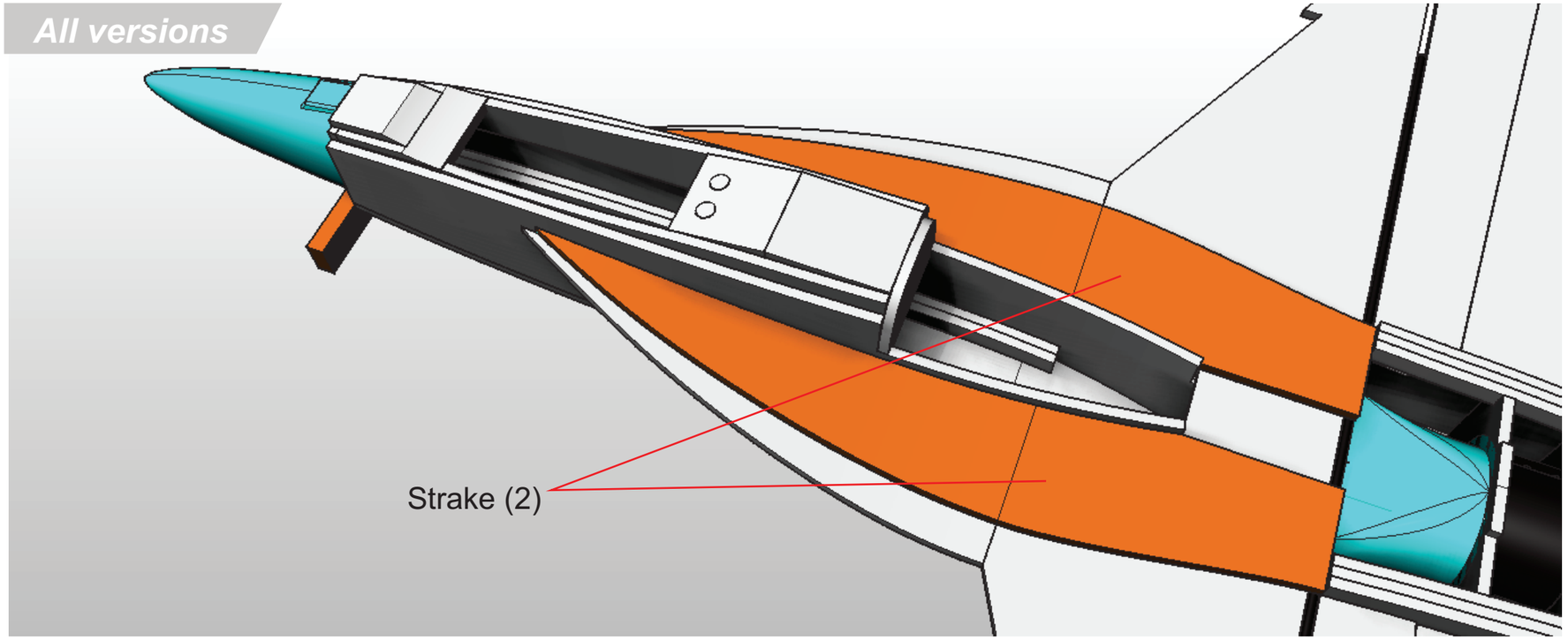

Glue **Strake (2)** pieces in place as shown

Keep the nosecone support in place

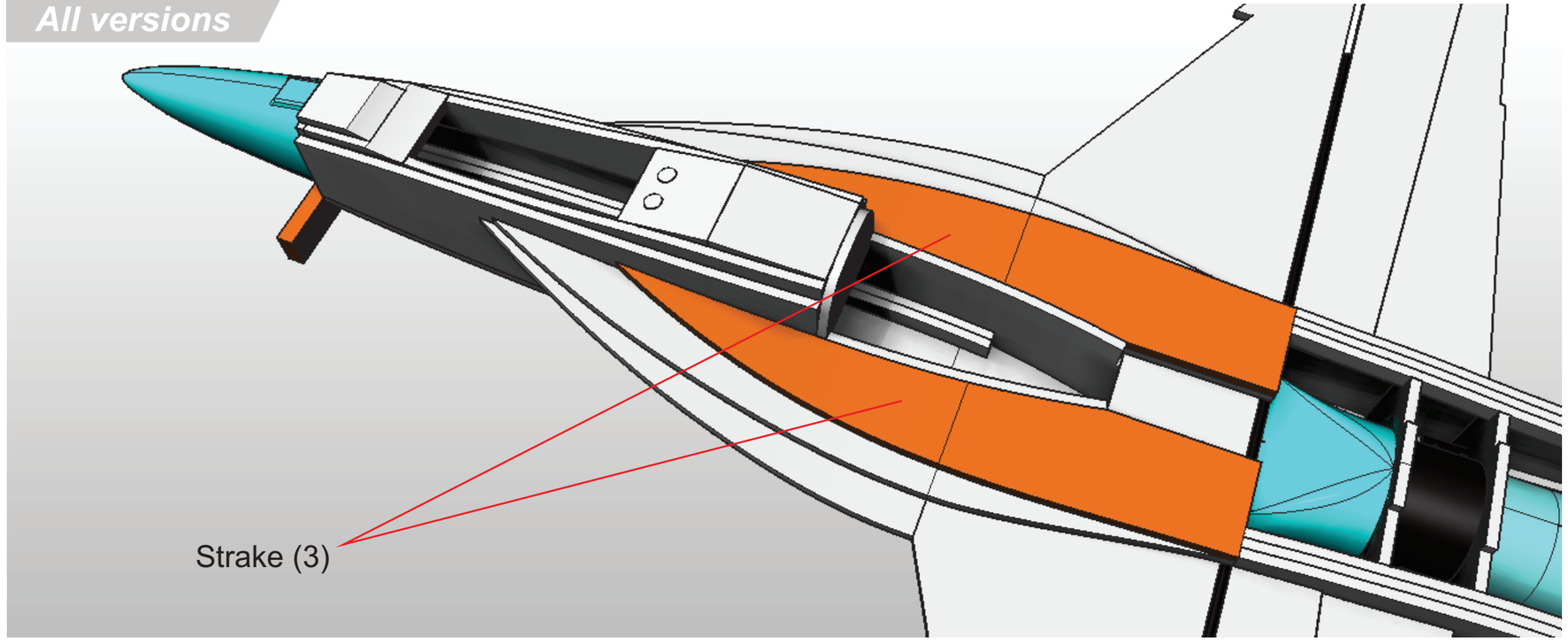

Glue **Strake (3)** pieces in place as shown

Keep the nosecone support in place

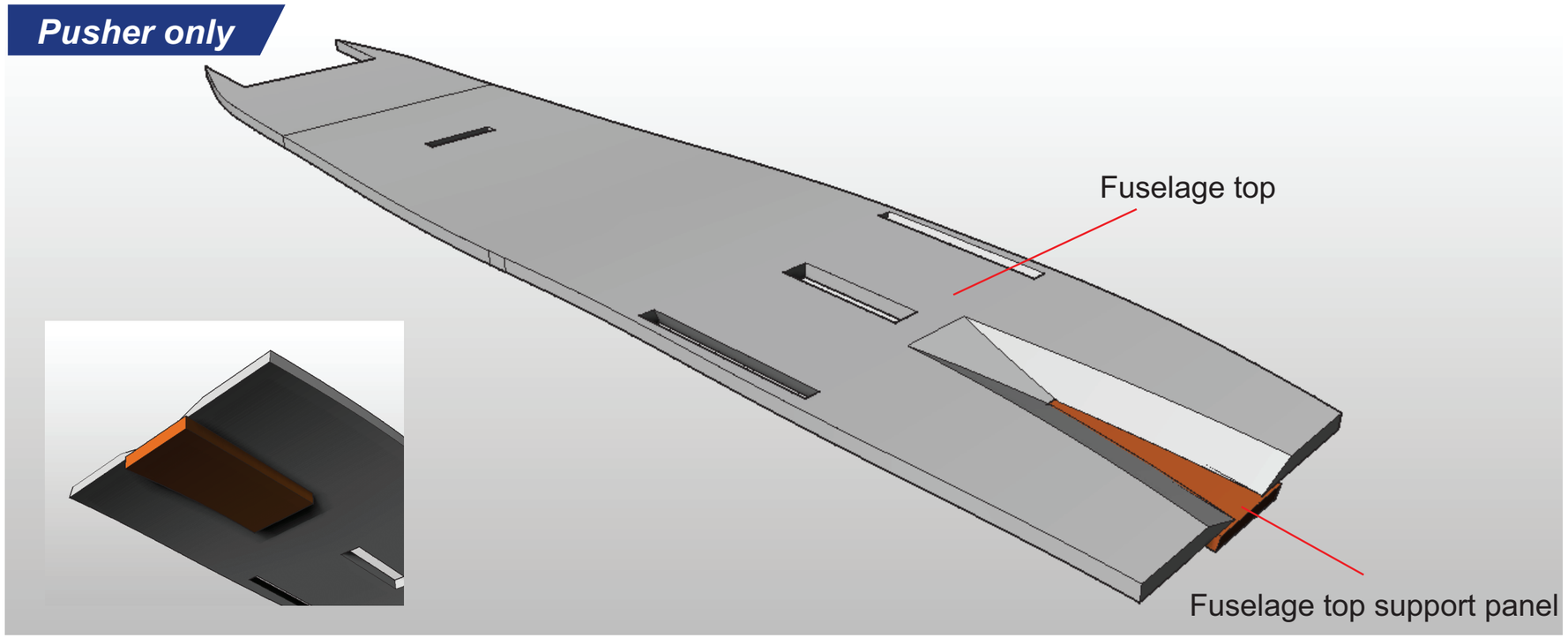

Pusher version

Glue the **Fuselage top support panel** to the underside of the **Fuselage top**

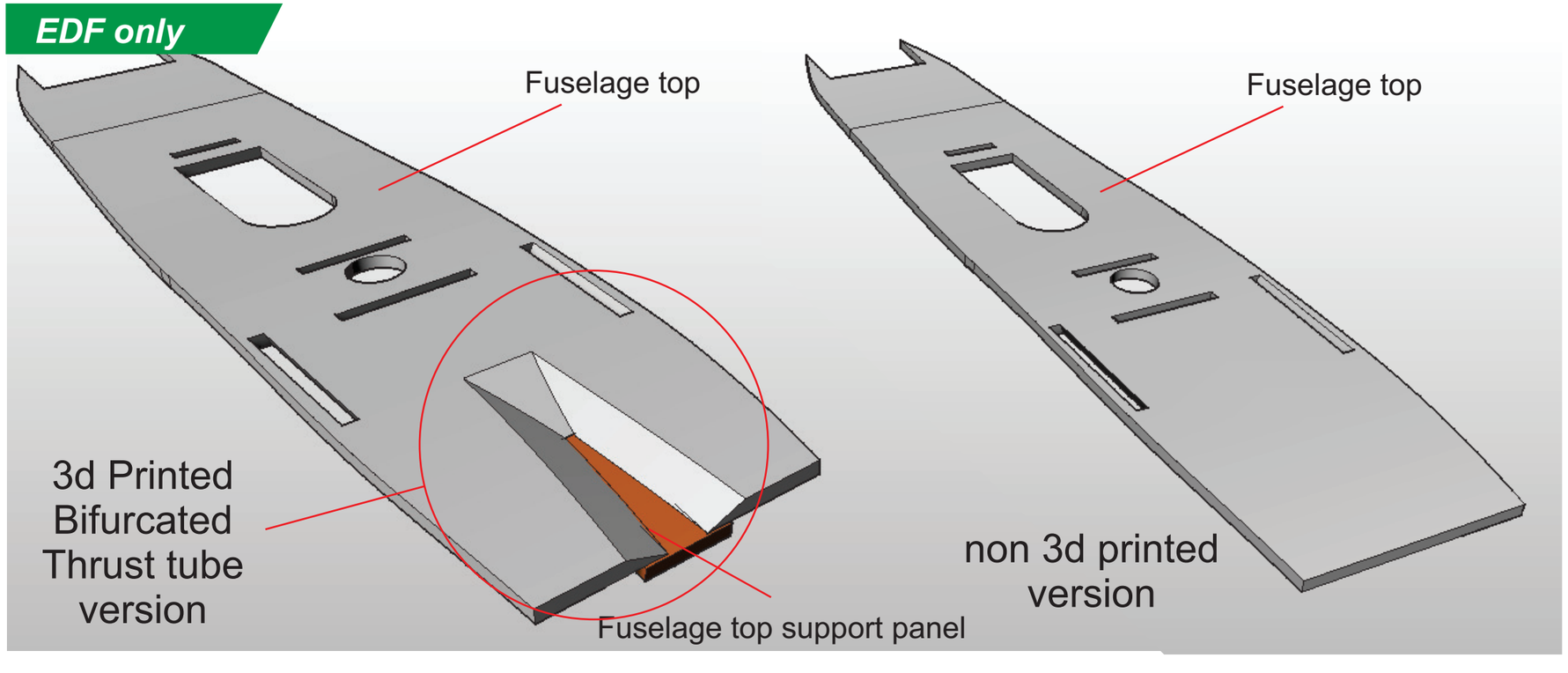

3D printed thrust tube version only

Glue the **Fuselage top - support panel** to the underside of the **Fuselage top**

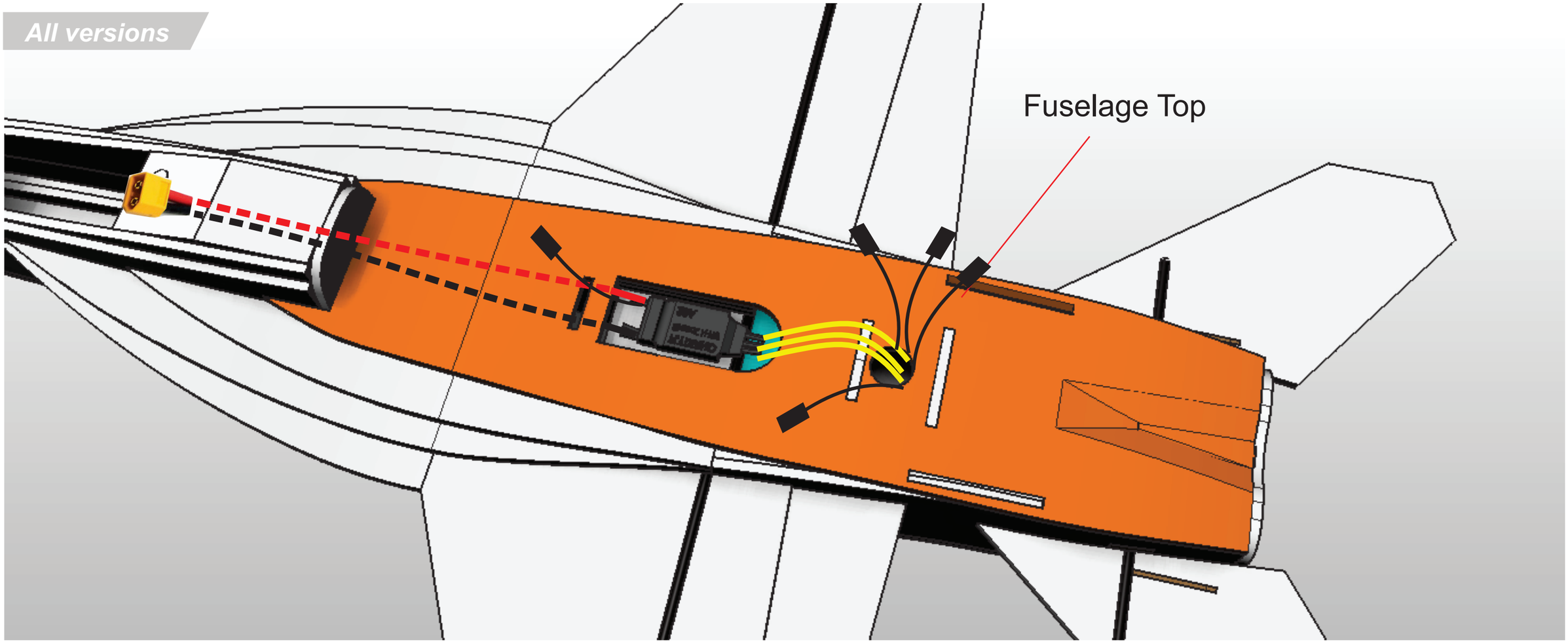

Run the motor cables and servo cables through the circular hole. Connect the motor cables to the ESC.

Run the power cables into the forward fuselage (under the fuselage top). Sit the ESC in the hole as shown

Glue the **Fuselage Top** onto the fuselage.

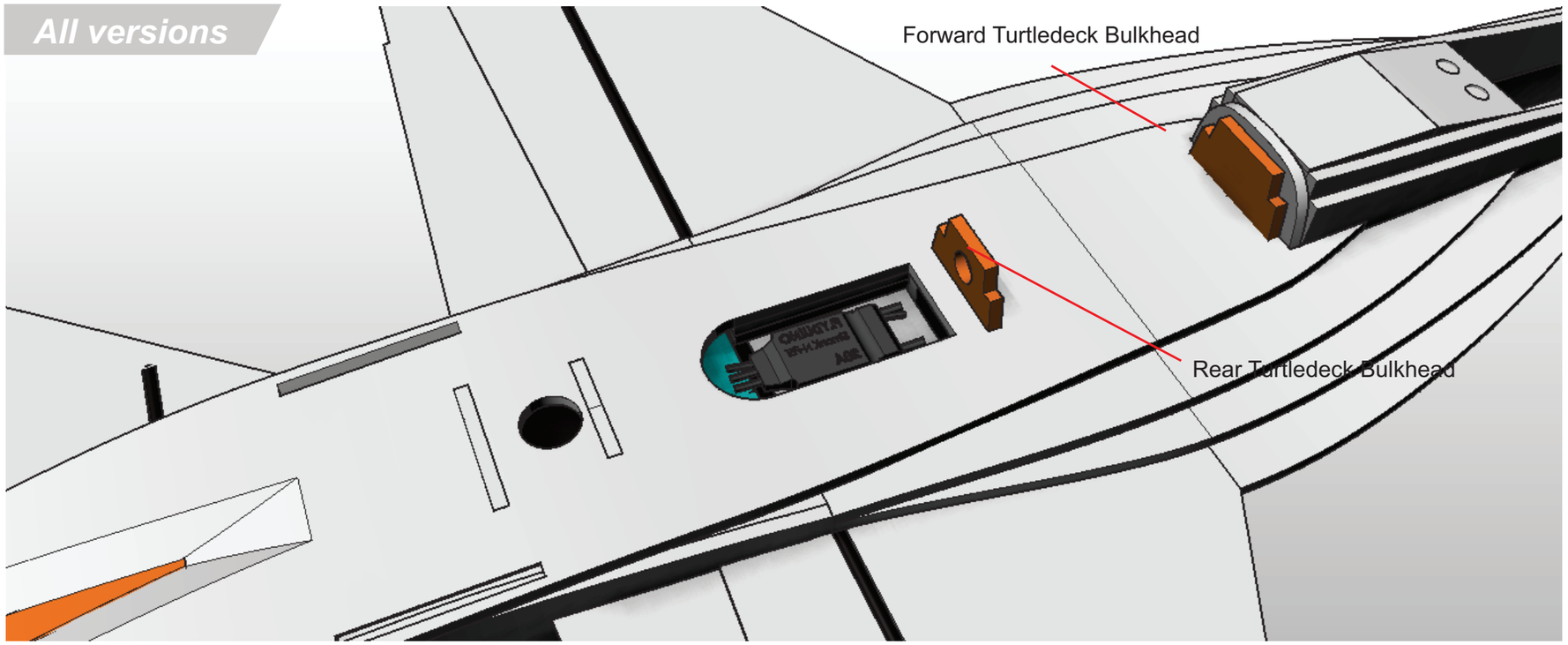

Fit the **Forward turtledeck bulkhead** on the centreline of the plane against bulkhead 2.

Glue the **Rear turtledeck bulkhead** in place.

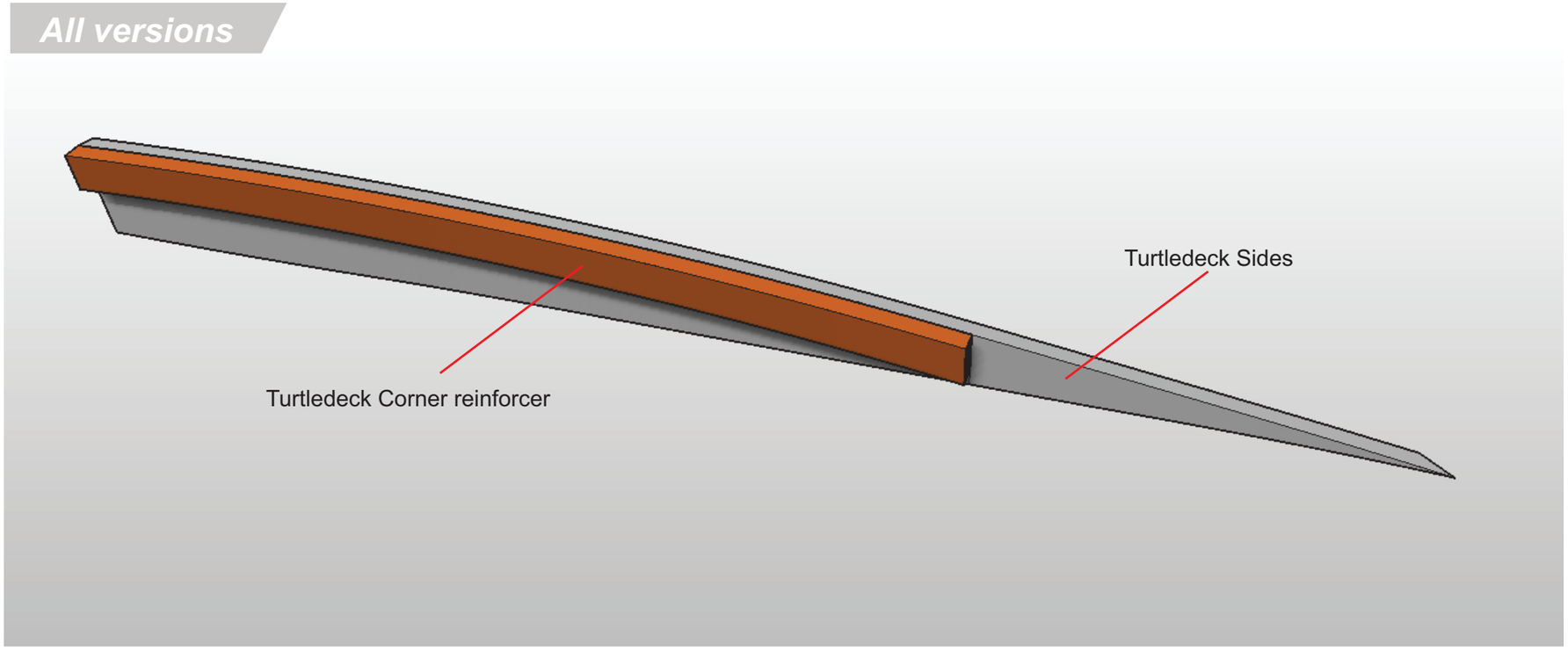

Glue the **Turtledeck corner reinforcers** to the **Turtledeck sides** to create a mirrored pair.

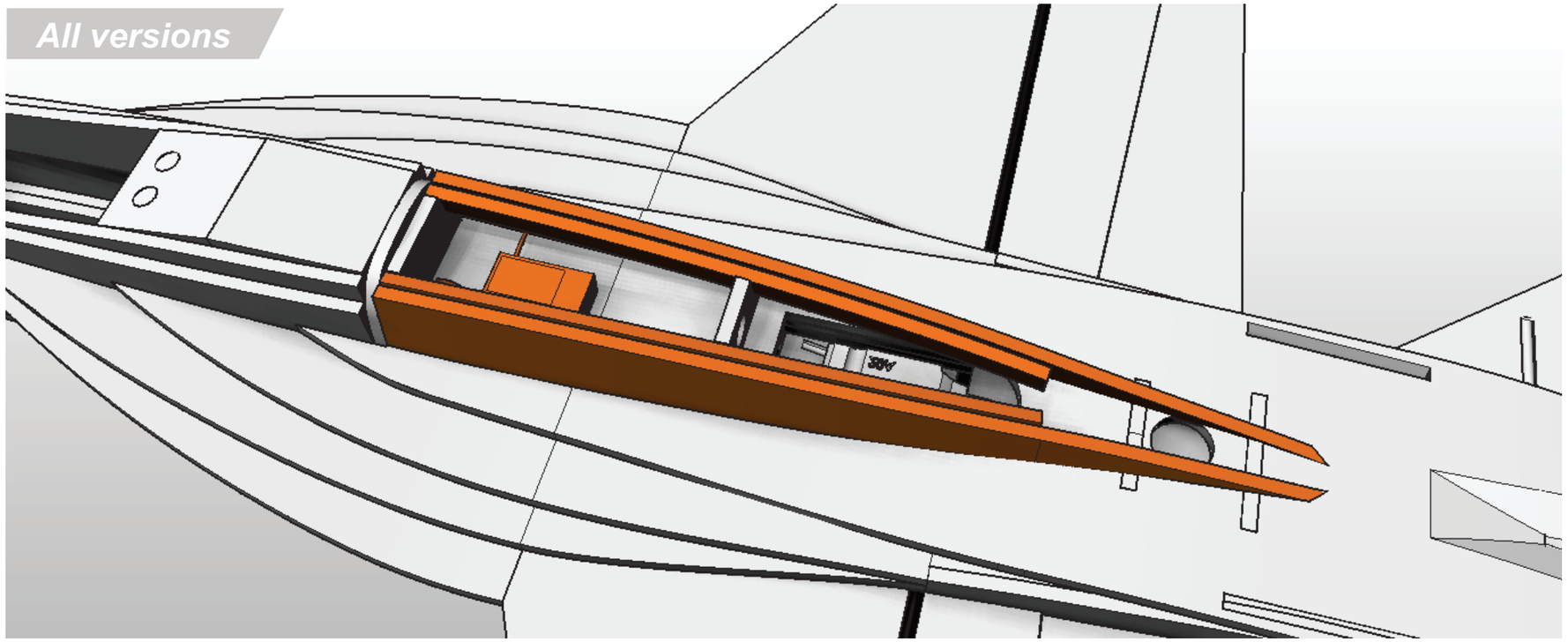

Gently curve the Turtledeck sides and glue them to the marked lines drawn on the fuselage top.

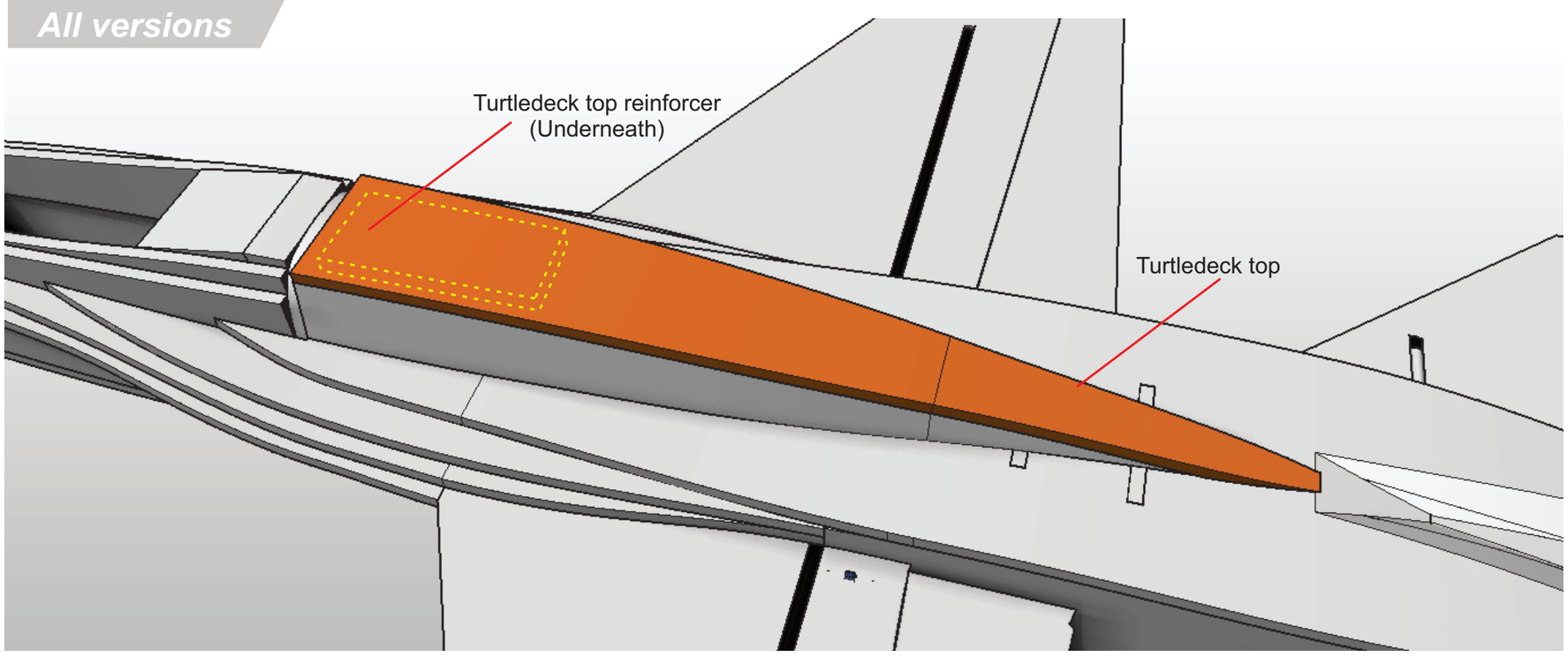

Glue the **Turtledeck top Reinforcer** to the **Turtledeck Top** and glue onto the fuselage.

All versions

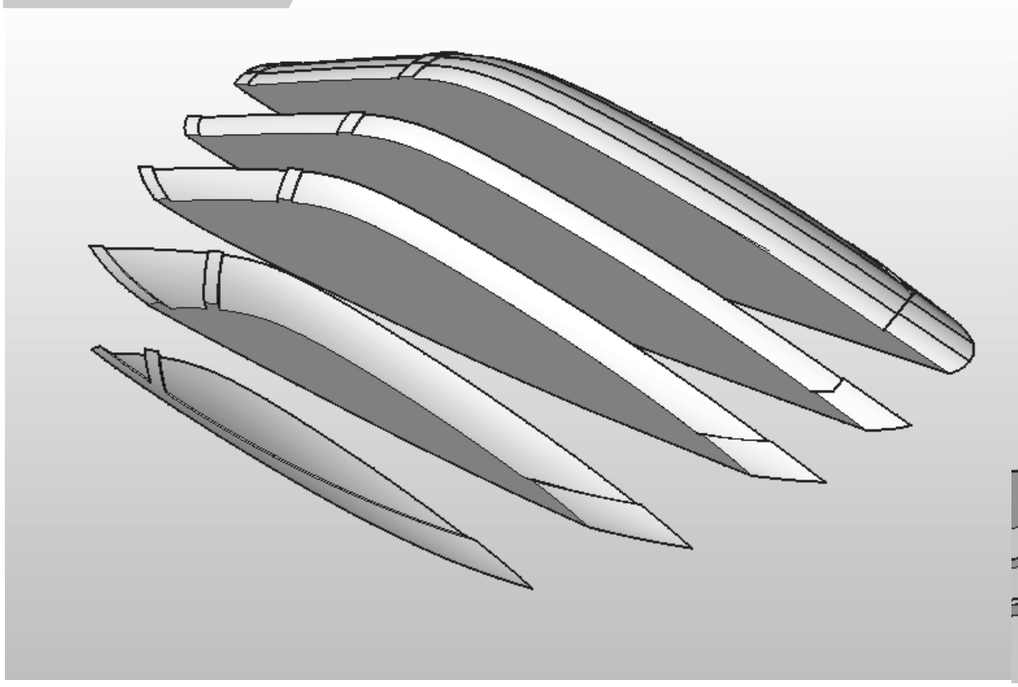

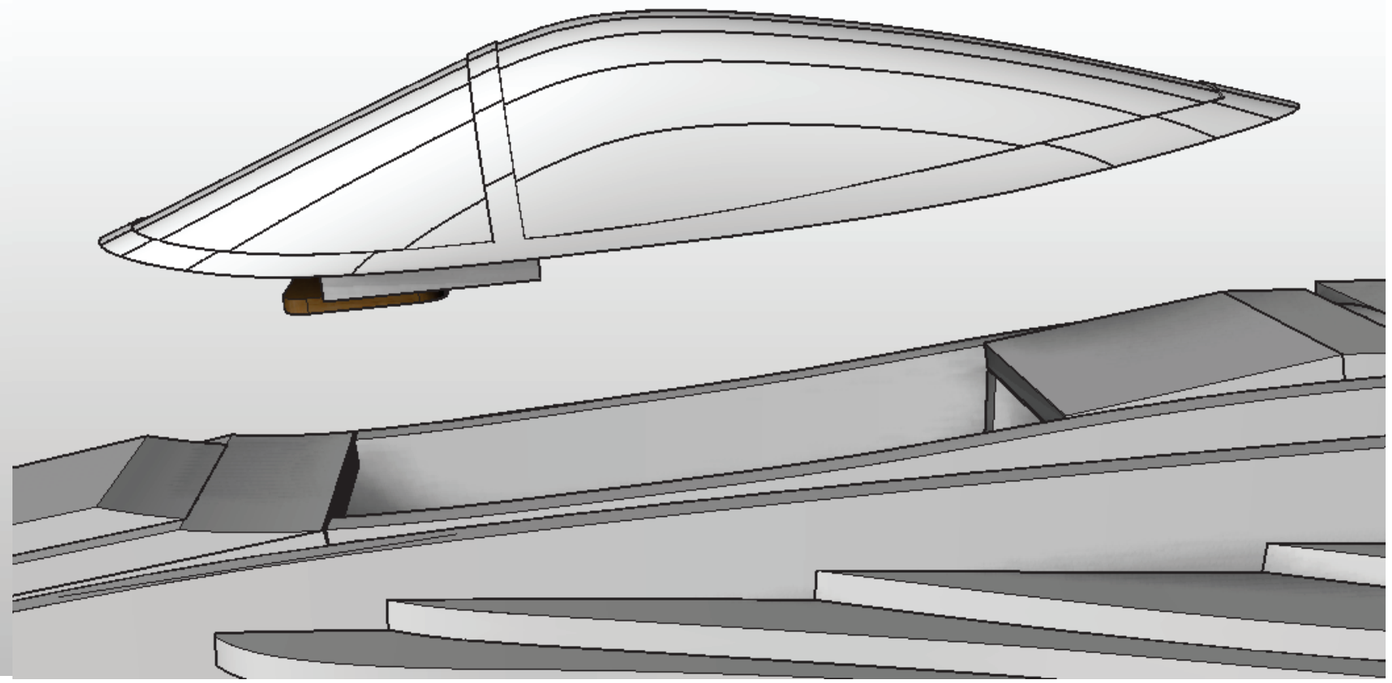

Create the canopy in the same way as the nosecone, or 3d Print one, and add a tongue and magnets as shown.

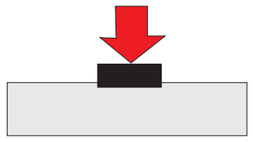

1. press magnet into depron to impress shape.

2. Dig out a recess for the magnet using a sharp knife.

3. Apply glue into recess and push magnet into it.

4. Whilst still wet, lay masking tape over the area.

5. When fully cured, remove tape and put adjoining magnet on top

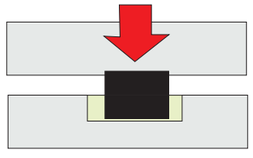

6. When correctly aligned, press adjoining depron onto the sticking up magnet to impress shape.

7. Repeat steps 2-4 for the upper part.

IMPORTANT.
Before glueing the upper magnet in, check that the magnet is the right way around!

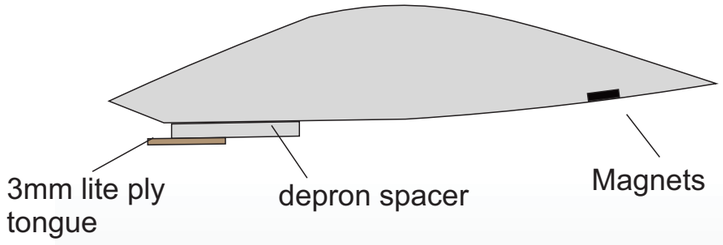

3D Printed Part
(optional)

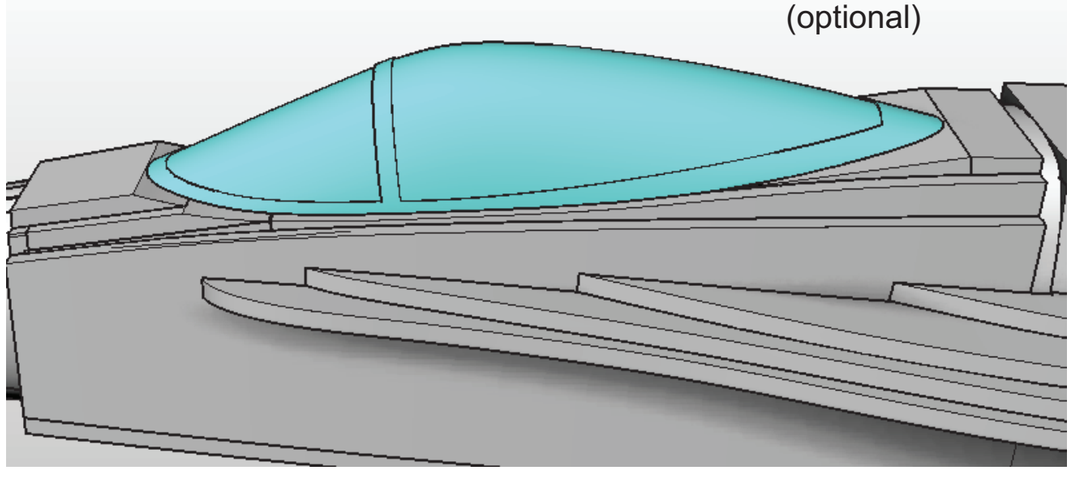

All versions

TWIN CANOPY VERSION

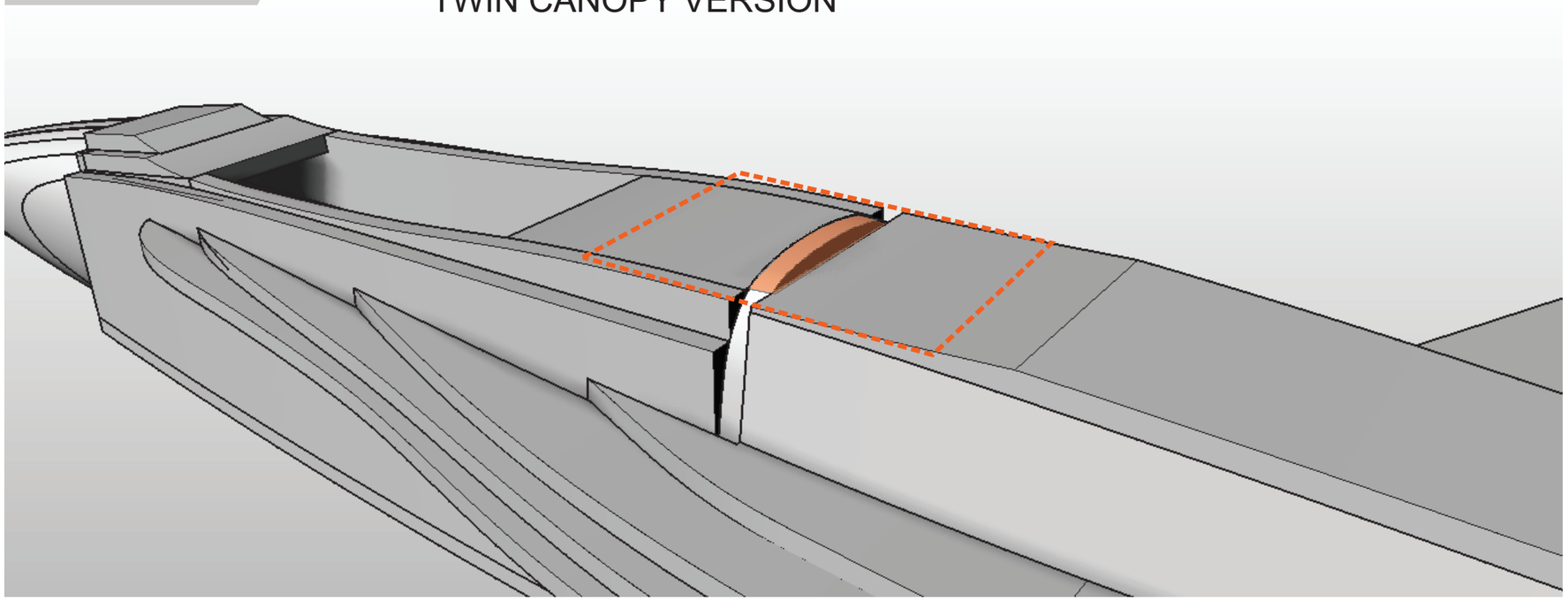

Twin Canopy only.

Sand Bulkhead 2 to create a flattened surface

All versions

TWIN CANOPY VERSION

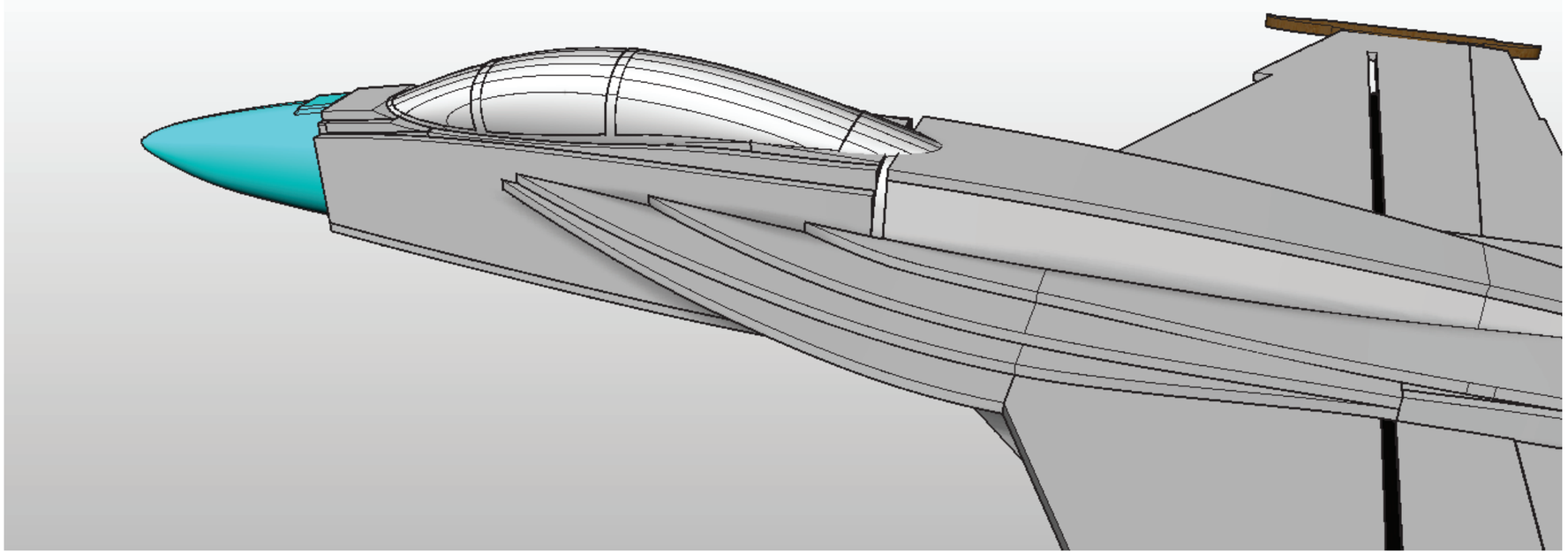

Make the Twin canopy as per the previous page either from laminated foam or 3D print

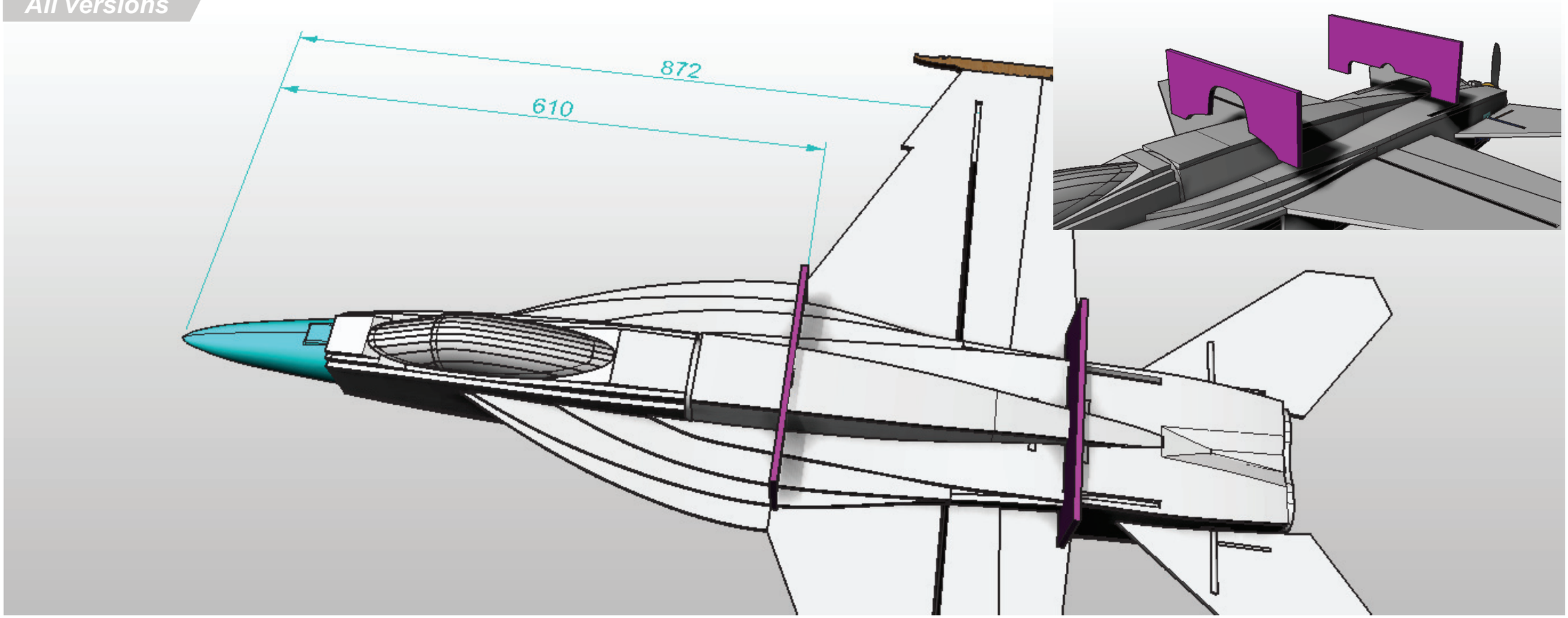

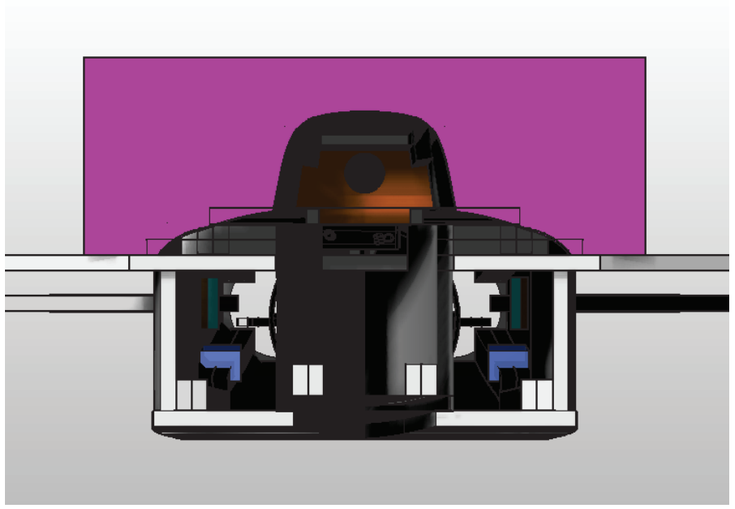

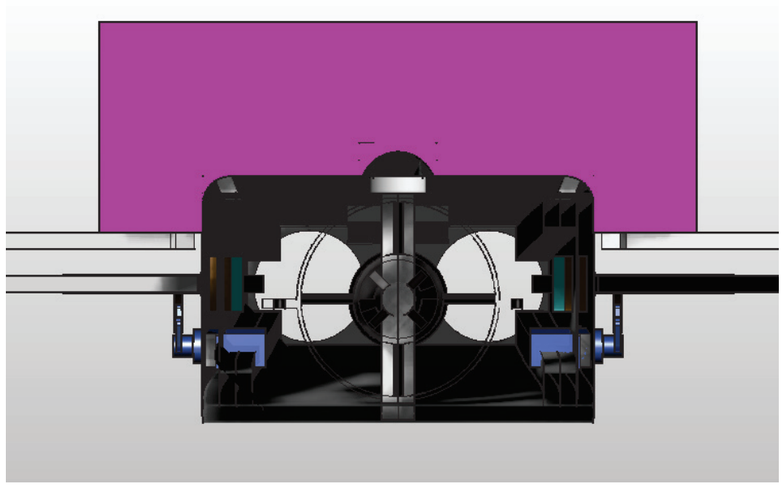

Sand the fuselage and turtledeck to shape using the jigs as shown.

Use the exhaust bulkhead and nosecone shapes to help you get the correct shape.

Sand the contoured step 'mountains' down to the 'valleys' on the forward wing/strake area.

Look carefully at the real aircraft for inspiration.

All versions

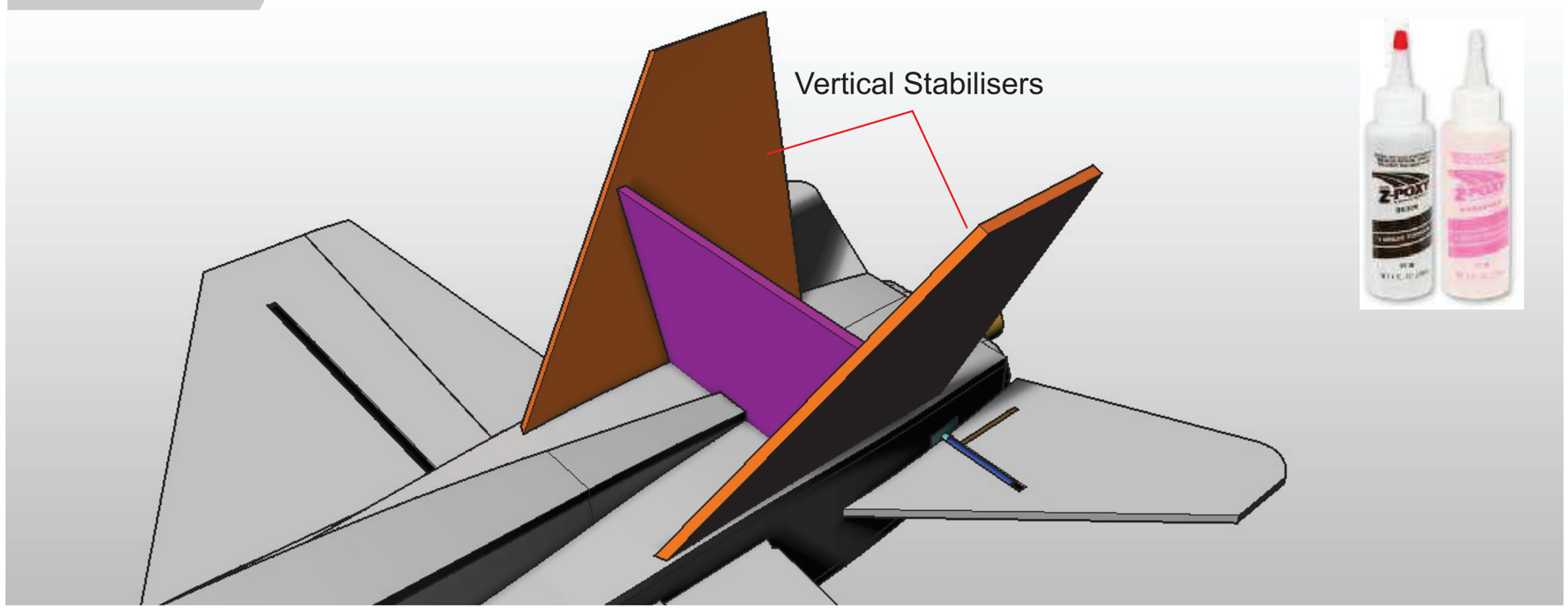

Glue the **Vertical stabilisers** into the fuselage using epoxy glue.

Use the alignment jig as shown. Hold in place until the glue is set.

All versions

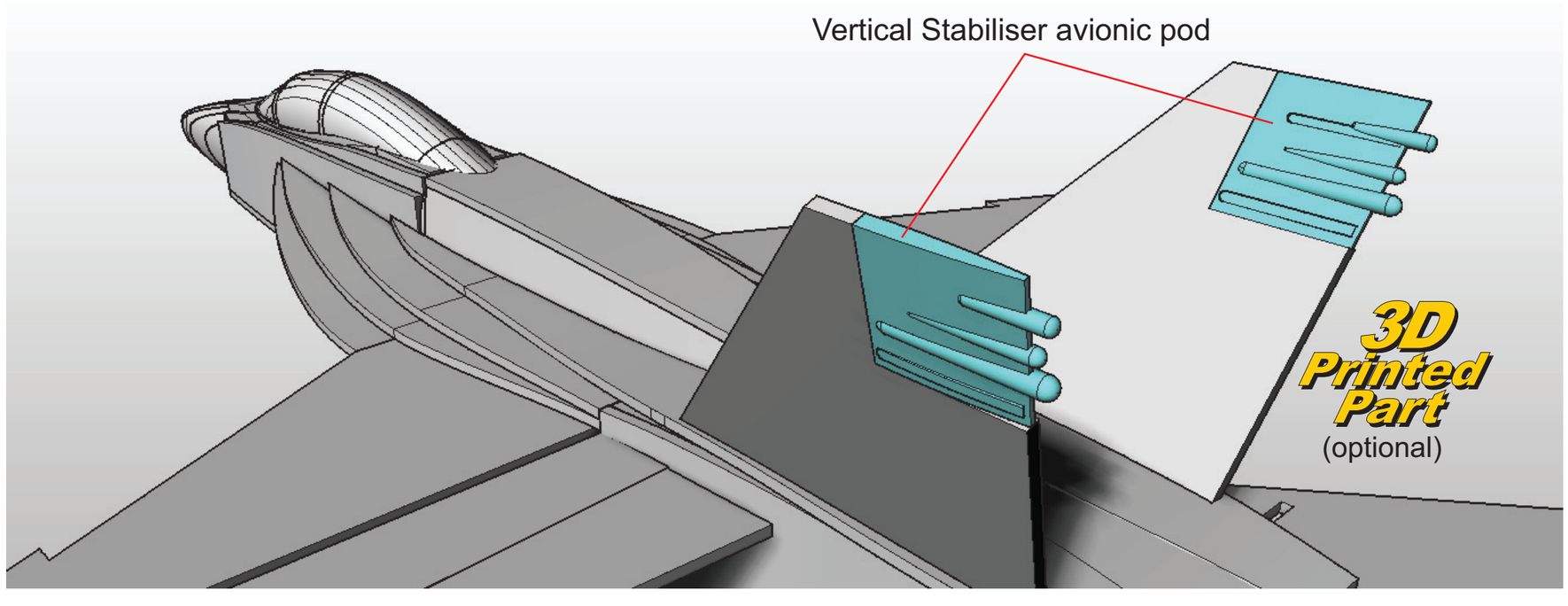

If you have a 3D printer then you can print out the **Vertical stabiliser avionics pod** details to make your printer more scale looking.

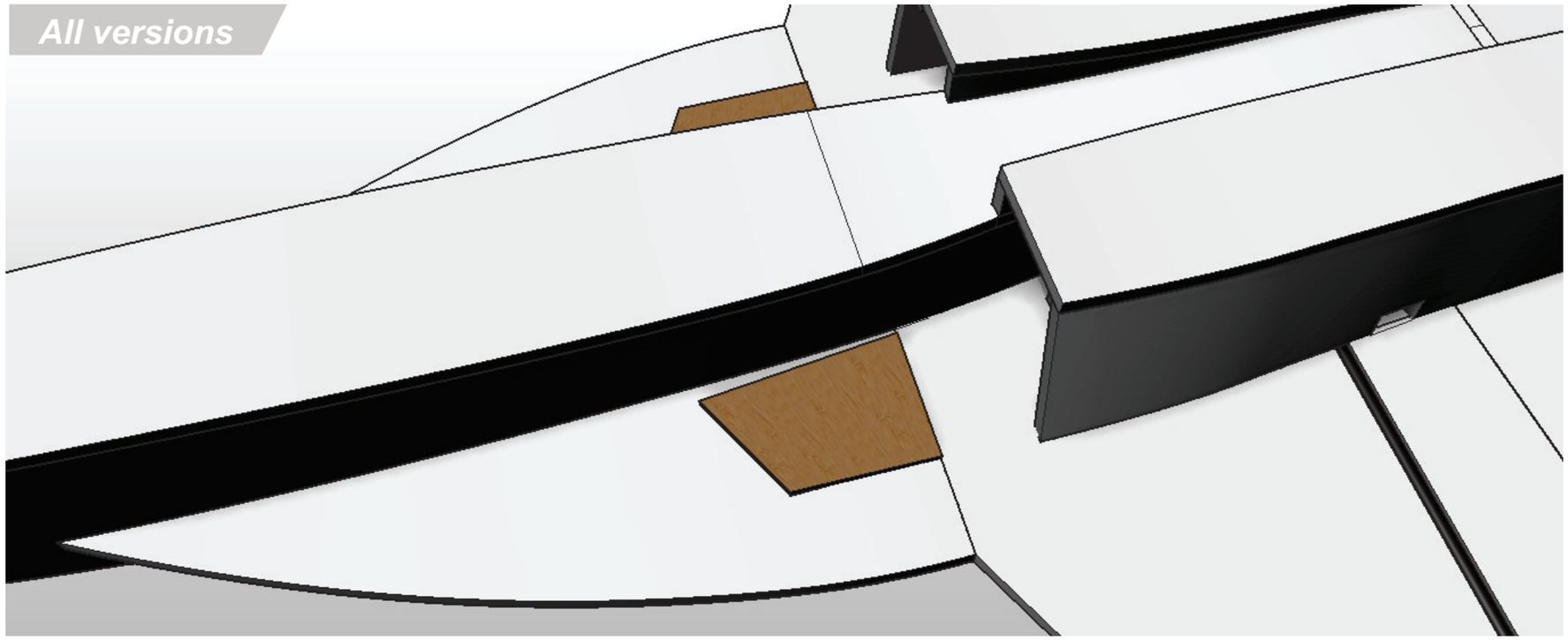

Use either 3mm depron or Liteply and glue the **Air intake Upper splitter** to the position indicated on the plans.

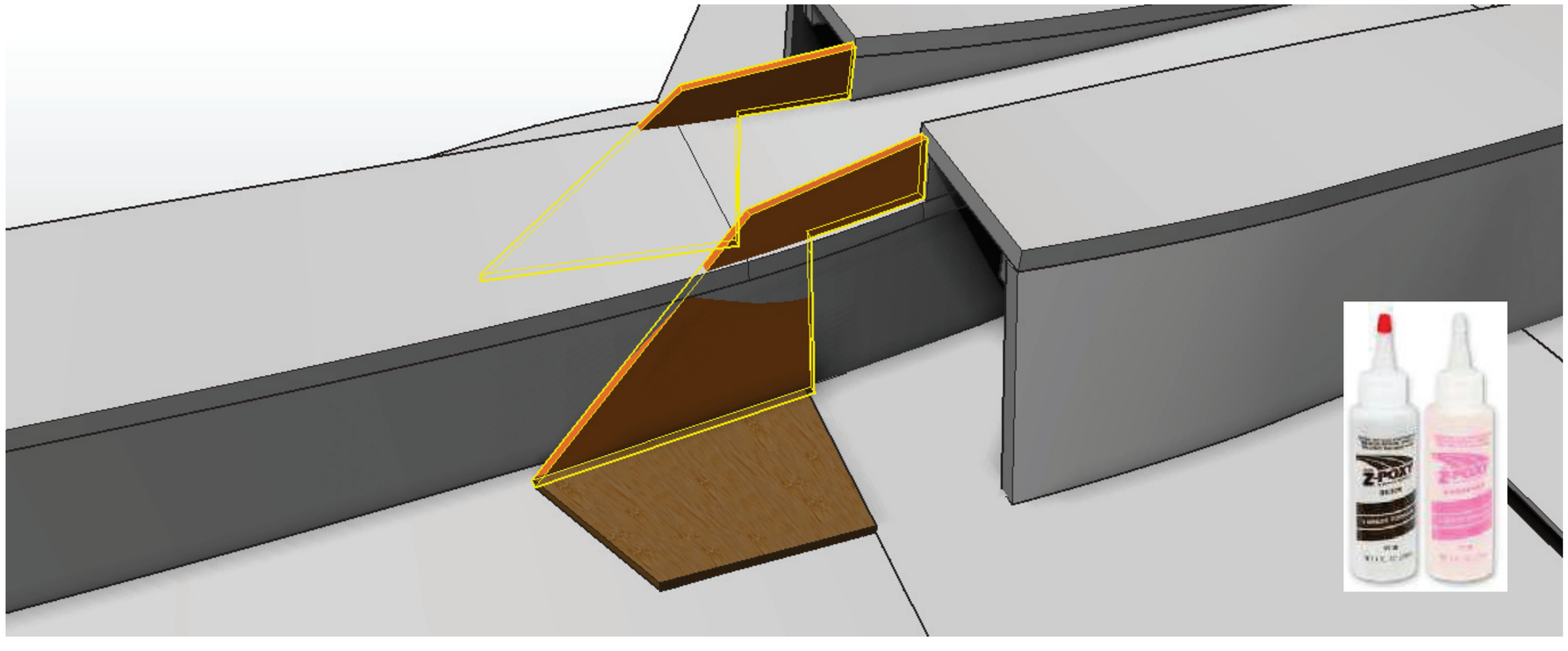

At this point of the build, the forward lower fuselage will be sanded to a more round shape. (not shown).

Glue the 3mm lite-ply **Inner Air intake Splitter** to sit as shown using epoxy. Please note that the upper edge sits 3mm (vertically) away from the fuselage belly.

Try to align the part as close as possible to the inner fuselage shape.

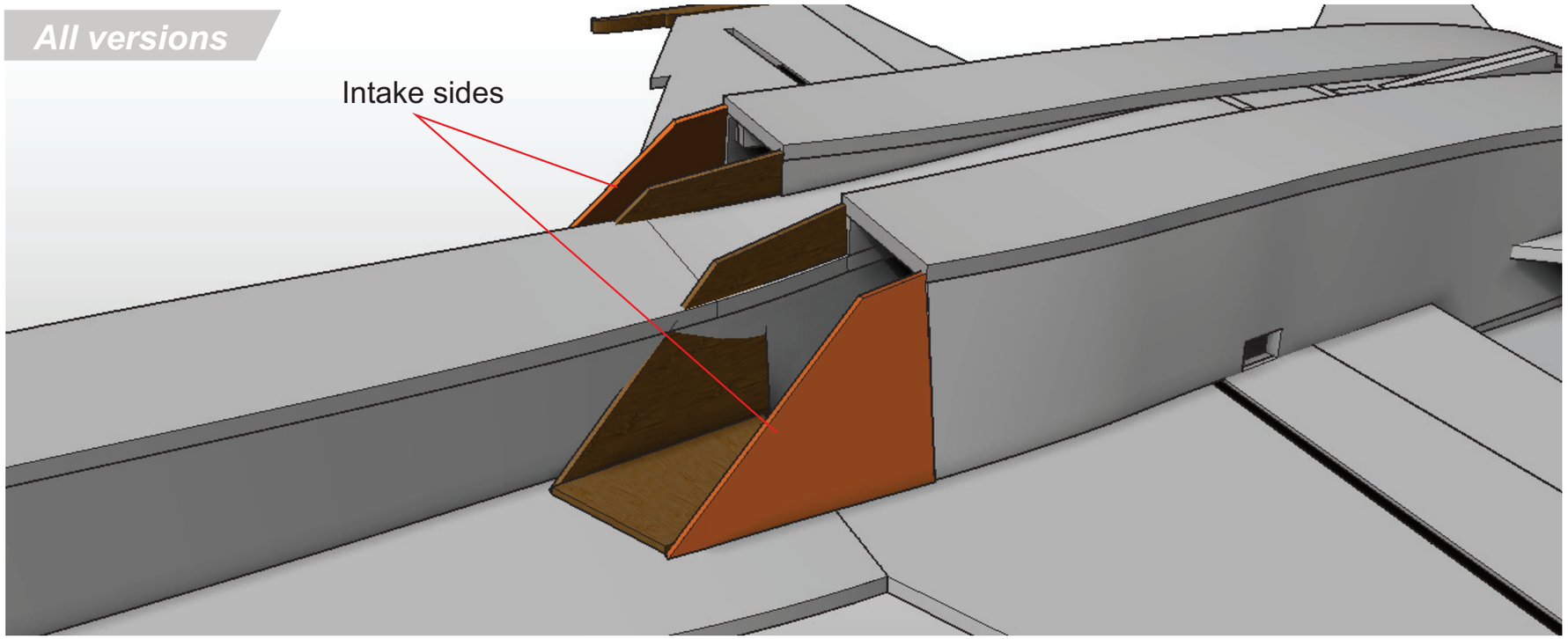

Glue the 3mm lite-ply **Air Intake sides** in place as shown.

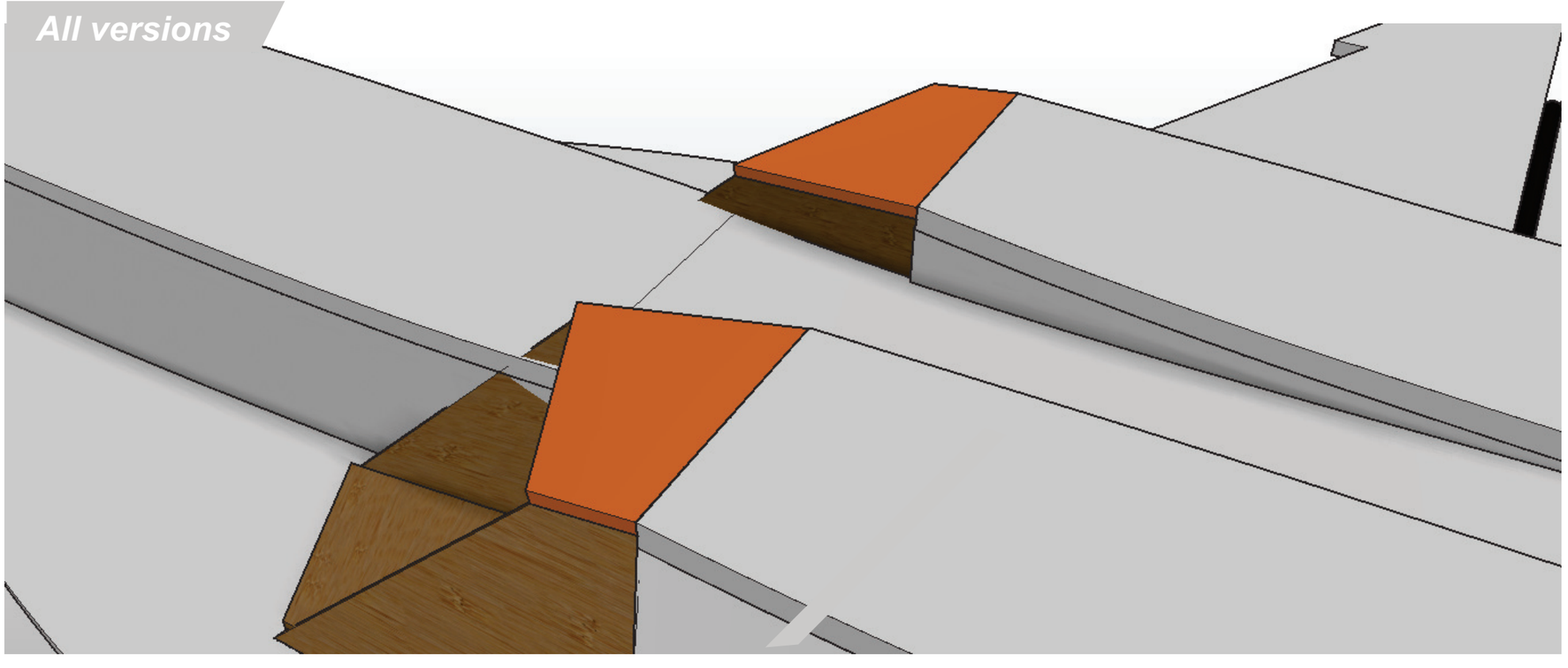

Glue the 3mm lite-ply **Air intake lower part** in place.

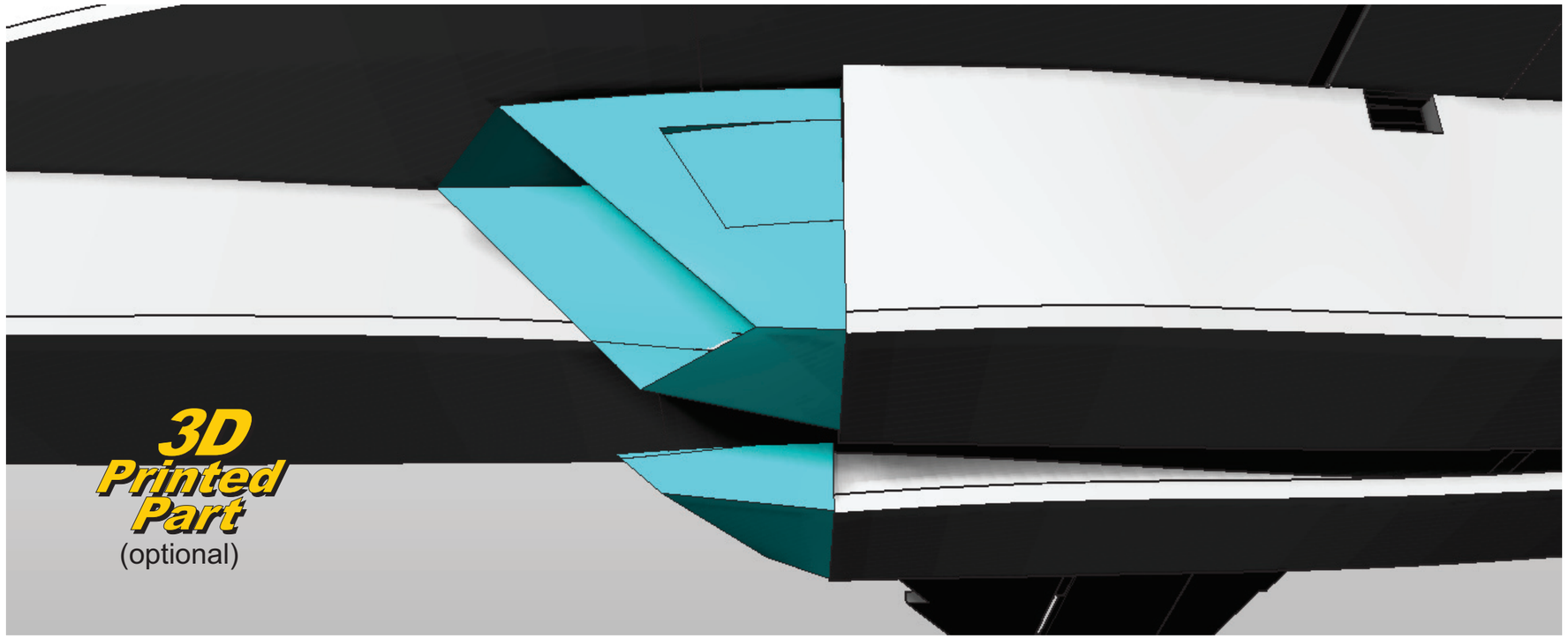

If you have a 3d printed, Glue the two 3D printed Air Intakes to the airframe.

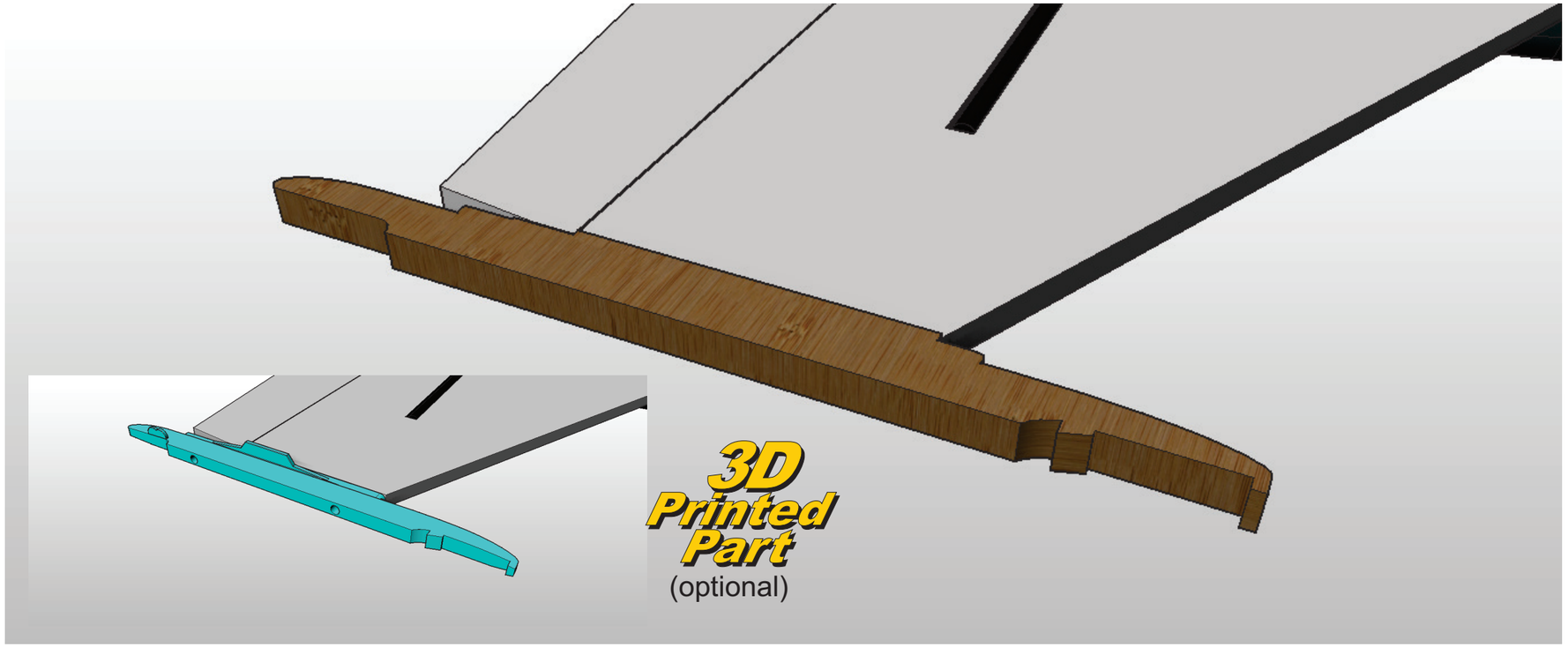

Fabricate two wingtip pylons from 8mm balsa (or 3d print) and glue onto the wingtips.

Use UHU por as it's flexible and may help to protect the wing in the event of snagging it on landing.

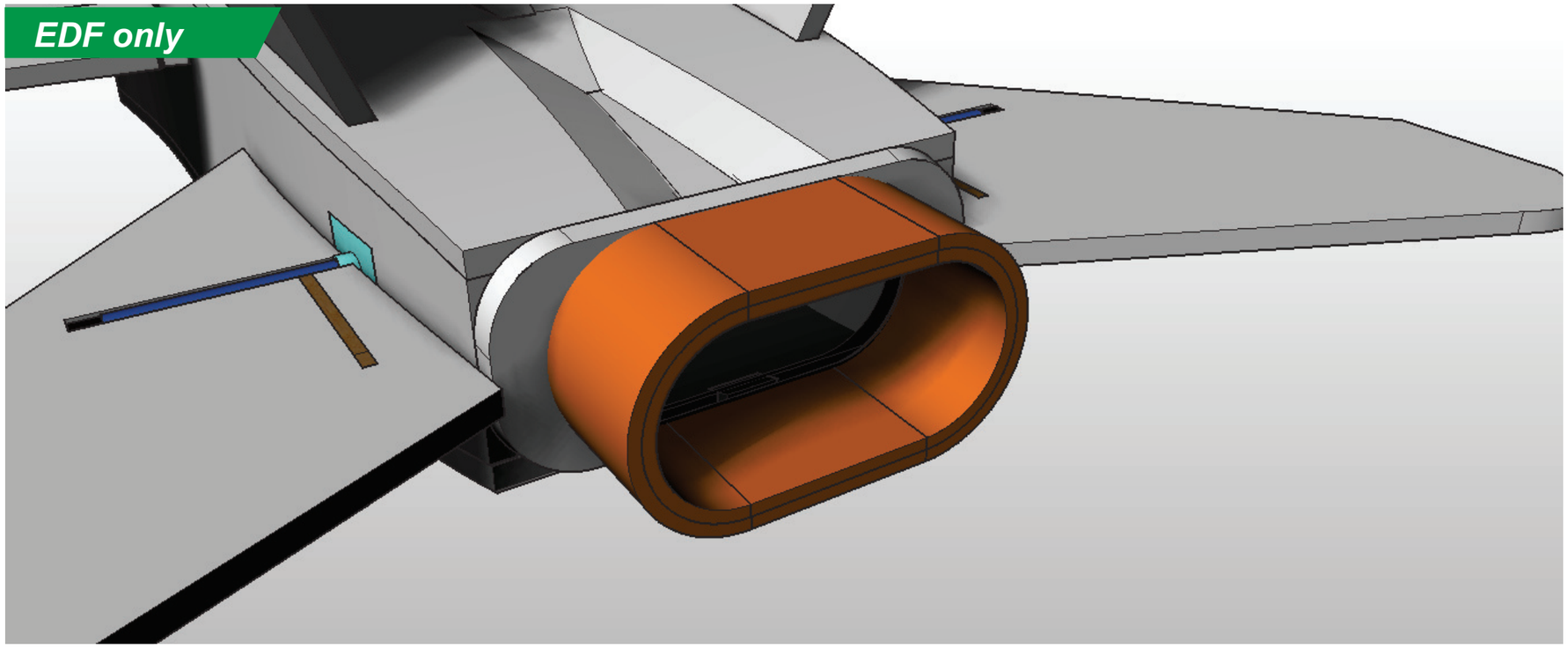

Using 3mm depron and the forming jigs to make a double skinned exhaust as shown.

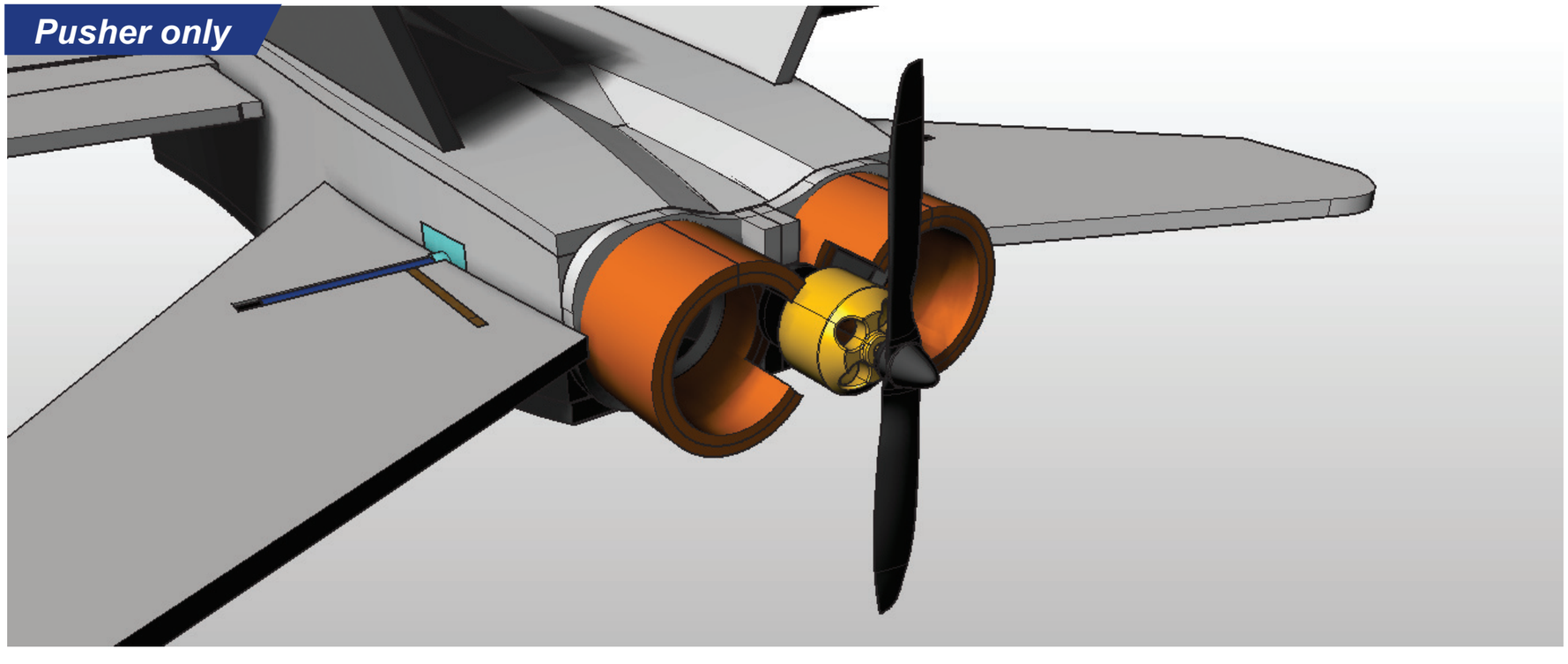

Using 3mm depron and the forming jigs to make two double skinned exhausts as shown, then trim away around your motor.

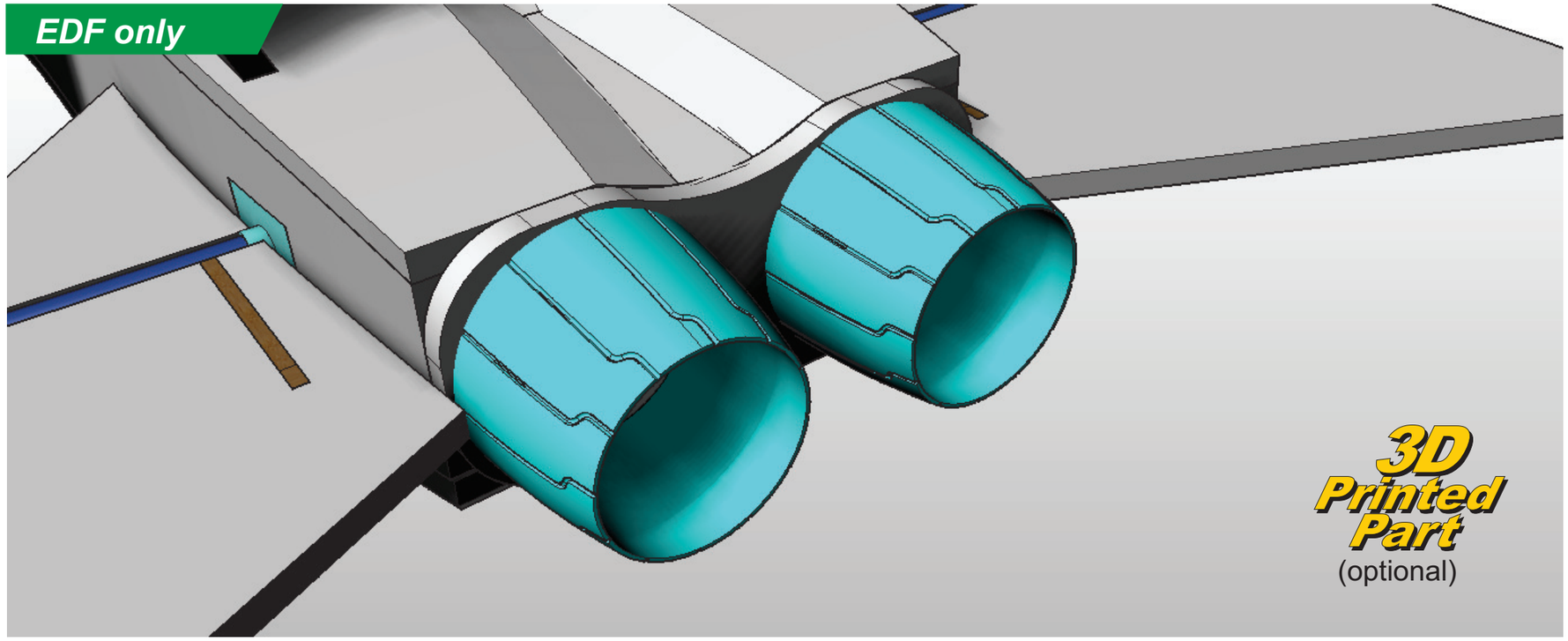

If you are using the 3d printed bifurcated duct, then use two 3d printed exhausts as shown.

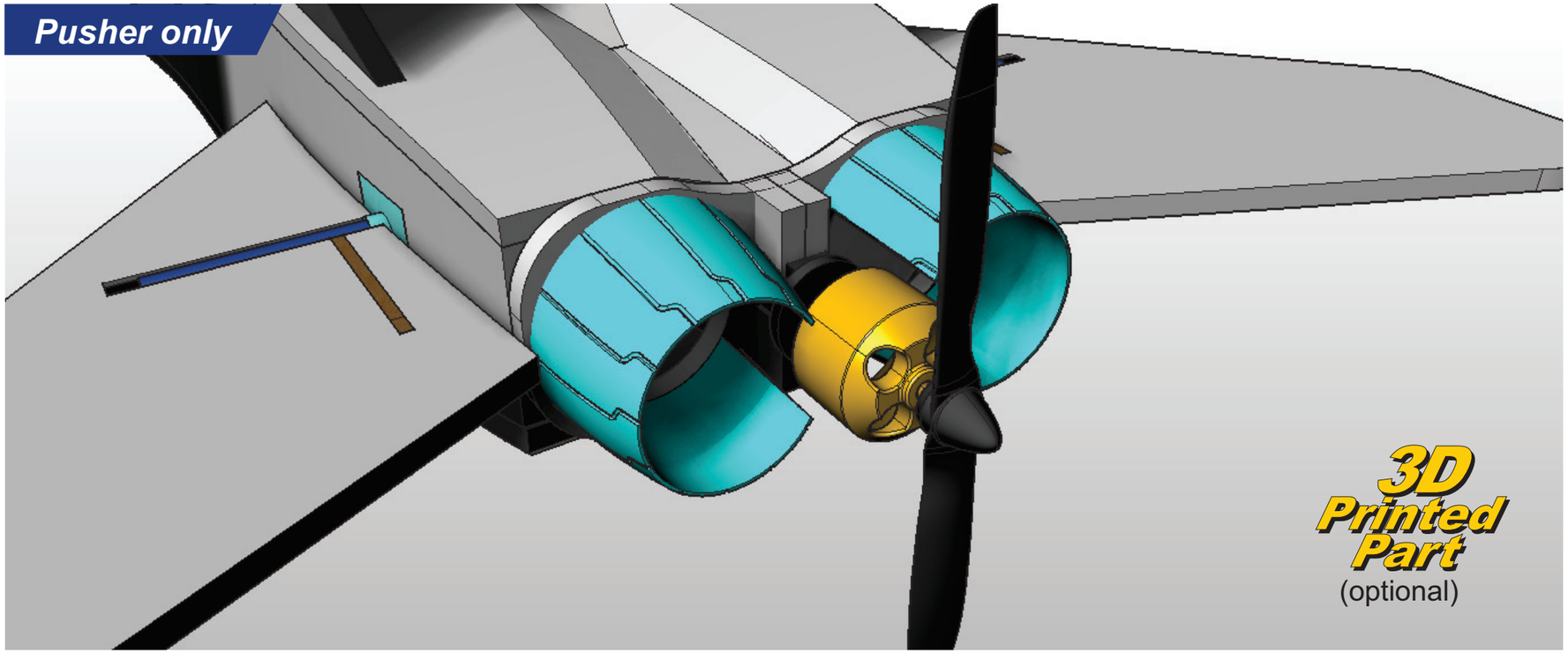

Glue the Pusher variant exhausts to the fuselage as shown.

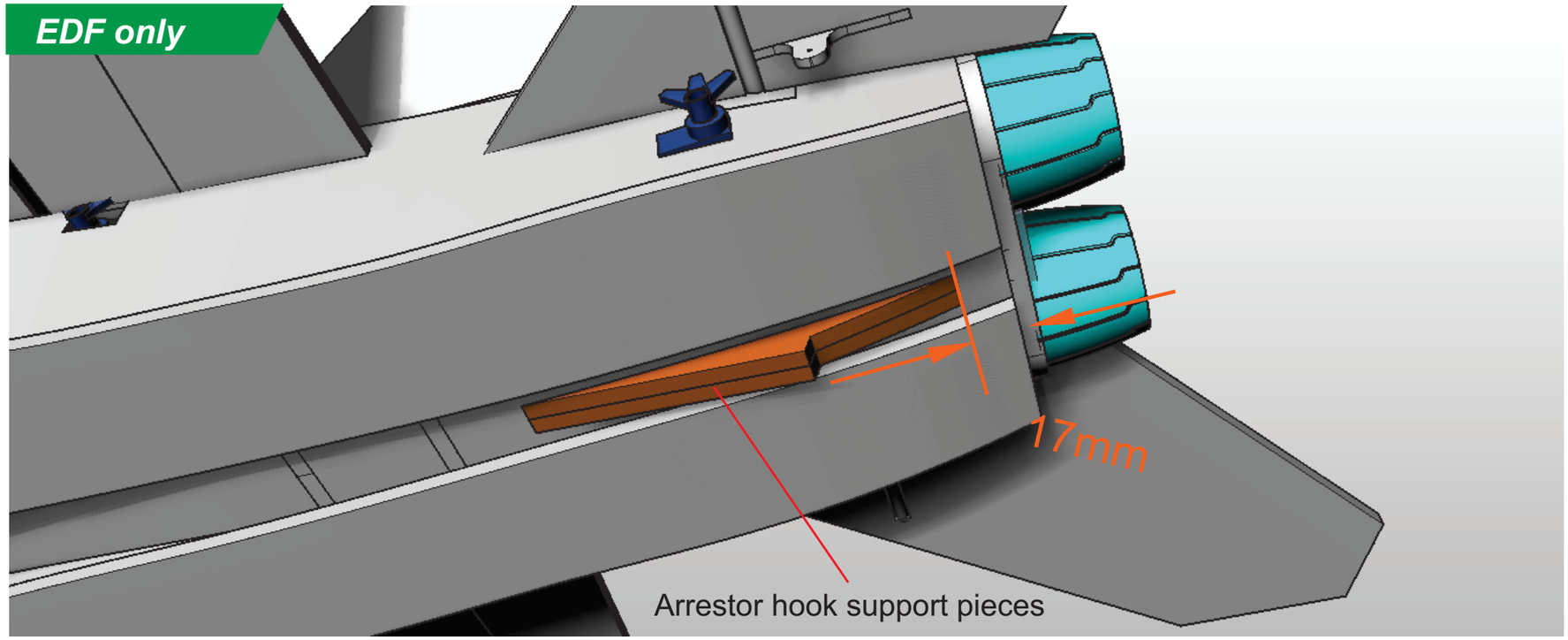

Glue the **Arrestor hook support pieces** together and then onto the underside of the fuselage as shown.

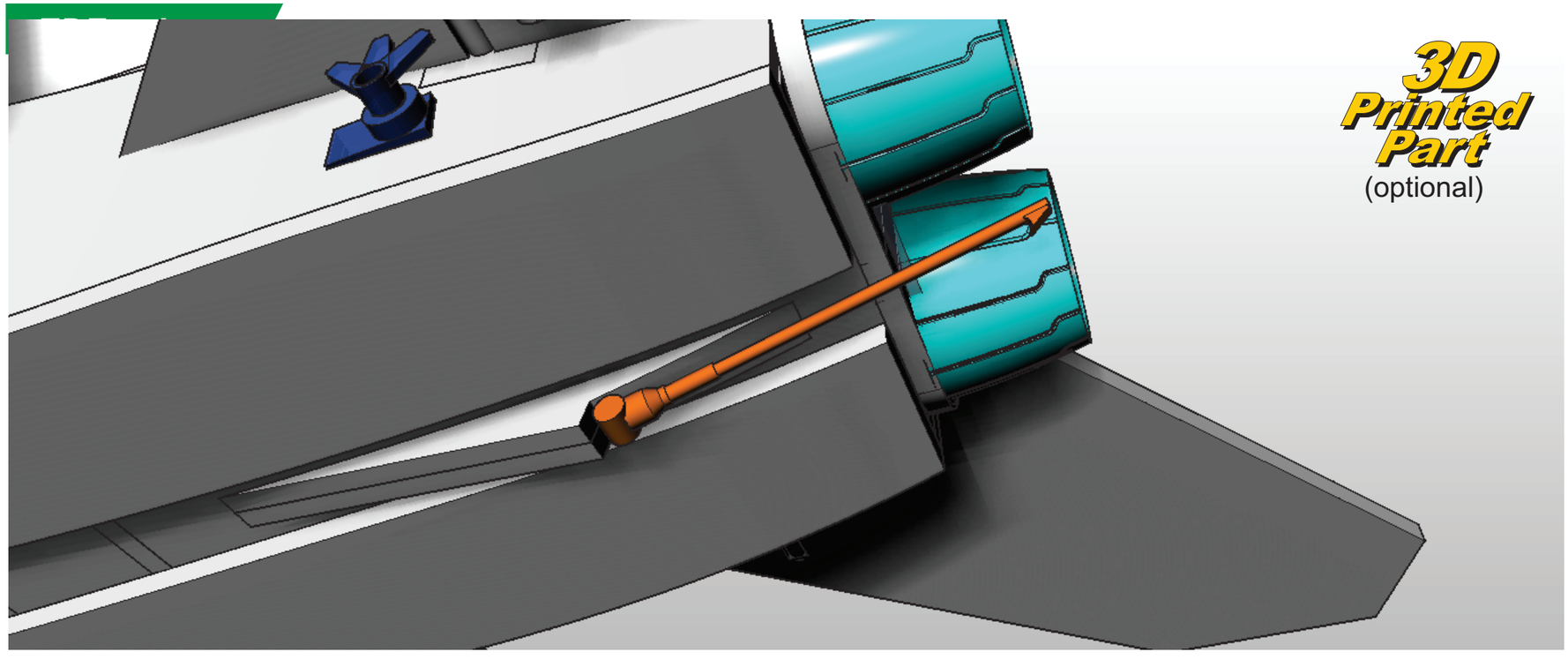

Fabricate an arrestor hook using 2x3mm lite ply pieces glued together

Alternatively, print out an arrestor hook using a 3D printer.

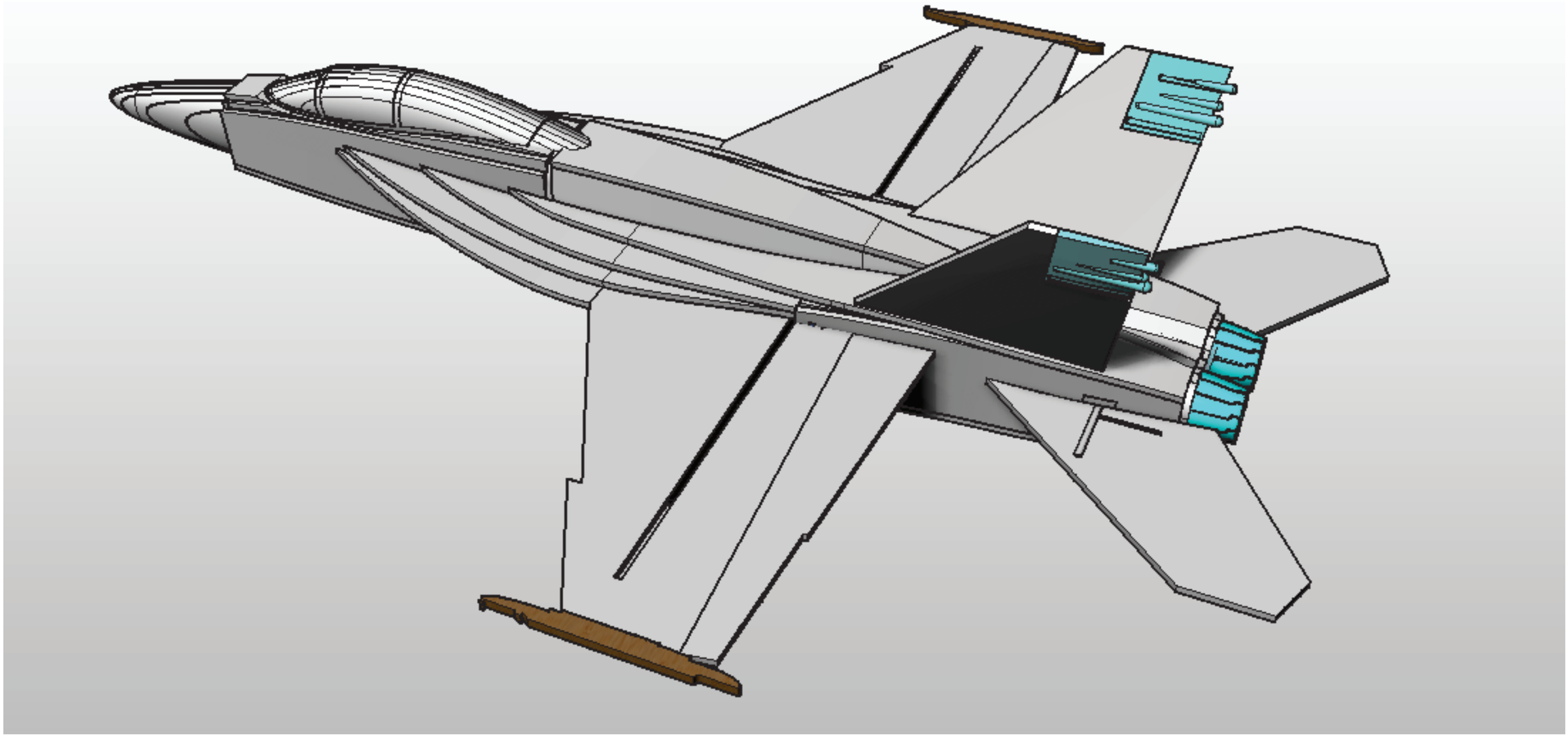

Congratulations! Your Super Hornet is Complete.
You can fly it as it is, or you can paint it!

There are lots of amazing paint schemes for the Super Hornet, browse on Google to find your favourite!