JETWORKS

Saunders-Roe A/1 'Squirt' Parkjet

3D Printed Part Version

1st Generation Jet Fighter
(prototype)

Construction Guide

SR. A/1 'Squirt'

The Saunders-Roe SR.A/1 was a prototype flying boat fighter aircraft designed and built by British seaplane manufacturer Saunders-Roe. It was the first jet-propelled water-based aircraft in the world. The SR./A.1 was directly inspired by the modest successes experienced by the Imperial Japanese Navy in using seaplane fighters. Seaplanes had performed successfully during both of the world wars, their achievements were often not highly publicised or well known.

Saunders-Roe recognised that the newly developed turbojet engine presented an opportunity to overcome the traditional performance drawbacks and design limitations of floatplanes. By not requiring clearance for a propeller, the fuselage could sit lower in the water and use a flying boat-type hull. The prospective aircraft's performance when powered by Halford H.1 engines was projected to be 520 mph at 40,000 ft. Saunders-Roe speculated that, as floatplanes could have staging grounds nearer to their objectives than land-based counterparts, both the time and effort involved in mounting missions, particularly offensive ones, could be reduced. Early jet aircraft were typically restrained in terms of their range due to the high fuel consumption involved, a factor which could be overcome by bringing forward their staging areas, something which a floatplane would be readily capable of doing. Re-basing to virtually any body of water could also be performed with little in the way of setup or ground preparation, according to the company.

There were intentions for the SR.A/1 to be used in the Pacific theatre against Japan; . Due to the war's end, pressure for the commencement of the type's production had lessened significantly. Flight testing with the prototypes revealed that the SR.A/1 possessed a relatively good level of performance and handling. Its agility was publicly displayed when Geoffrey Tyson performed a demonstration of high-speed aerobatics and inverted flight above an international audience at the 1948 Farnborough Air show.

Due to a lack of orders, work on the project was suspended, leading to the remaining prototype being placed into storage in early 1950. During November 1950, shortly after the outbreak of the Korean War, interest in the SR.A/1 programme was briefly resurrected. However, it was soon recognised that the concept had been rendered obsolete in comparison to increasingly capable land-based fighters, forcing a second and final cancellation. During June 1951, the SR.A/1 prototype (TG263) flew for the last time. It is now in the Solent Sky Museum in Southampton, UK.

Although the aircraft never received an official name, it was commonly referred to by company workers as "Squirt".

Photo’s used in this manual are copyright of their respective owners.

Designers Notes

When I first saw the SR. A/1 It struck me as an ungainly and bulky plane. but when I learned about its history it struck a chord and it has become a plane I am now very fond of, for its innovation and bold unorthodox approach.

I love the folding AND rotating float system on the original plane so I have tried to recreated this on the model controlled by a single servo system and tensioned lines such as fishing line or kevlar thread.

I've based the design solely on a 70mm EDF unit that enables a wide thrust range from 4s to 6s batteries to help establish the right thrust-weight ratio to propel the model through water and into the air. At the time of writing, the model is untested.

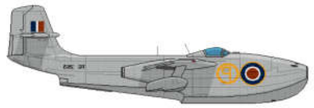

Before you start.

Adhesives

> For the majority of construction :
- UHU Creativ for Styrofoam (also called UHU POR)
- Bob Smith Industries Foam Cure. (UHU POR Alternative)

>For wing spars and motor mounts :
- Epoxy. (5 and 15mins cure times are the most convenient) micro-baloons can be added to reduce weight.

> For servo's / and quick grab :
- Hot melt glue gun - Caution if the glue gets too hot it will melt foam - test first!

Tapes

> For holding parts tightly together whilst glue sets
- Low tack masking tapes

> For leading edges, hinges, general strengthening
- 3M Gift tape (Purple - not green one!) - I prefer lightweight plastic hinges.

Cutting parts

1. Print the plans,
2. Cut around each part using scissors - allow a border of approx (1/4") 6mm
3. Use either 3M spray mount or a very light coat of 3M 77 to the back of the parts and stick in an economical layout on the Depron foam.
4. Using a safety rule and craft knife over a cutting mat - important! use a fresh blade otherwise it will drag and spoil the foam. (I find the stanley knife perfect) make the straight edge cuts, then the curved parts freehand.
5. Once the parts are cut-out, keep the template stuck to the part until just before needed to help identify the parts.
6. After use, I find it helpful to keep all the used tempates in case replacement parts need making. (the glue eventually dries and they don't stick together!)

IMPORTANT Wherever the plans call for marking guidelines onto the depron, please ensure that you do otherwise it can cause problems later on. I suggest you use a Sharpie Fineliner to transfer the lines.

Glueing parts together.

1. Ensure a really good fit - this will reduce the amount of adhesive used. The Bar Sander is a great tool for this.
2. Follow the adhesive instructions closely.
3. Use ordinary steel head pins to help keep the parts located whilst epoxy sets.
4. Use objects as weights such as paperweights to apply pressure whilst adhesive sets.
5. Use masking tape to apply pressure whilst adhesive sets. Also use masking tape to along the slots for the wing spars whilst gluing the carbon rod spars into the wings. This prevents the glue protruding and gives a nice finish.

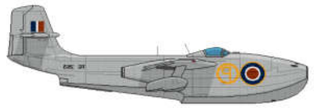

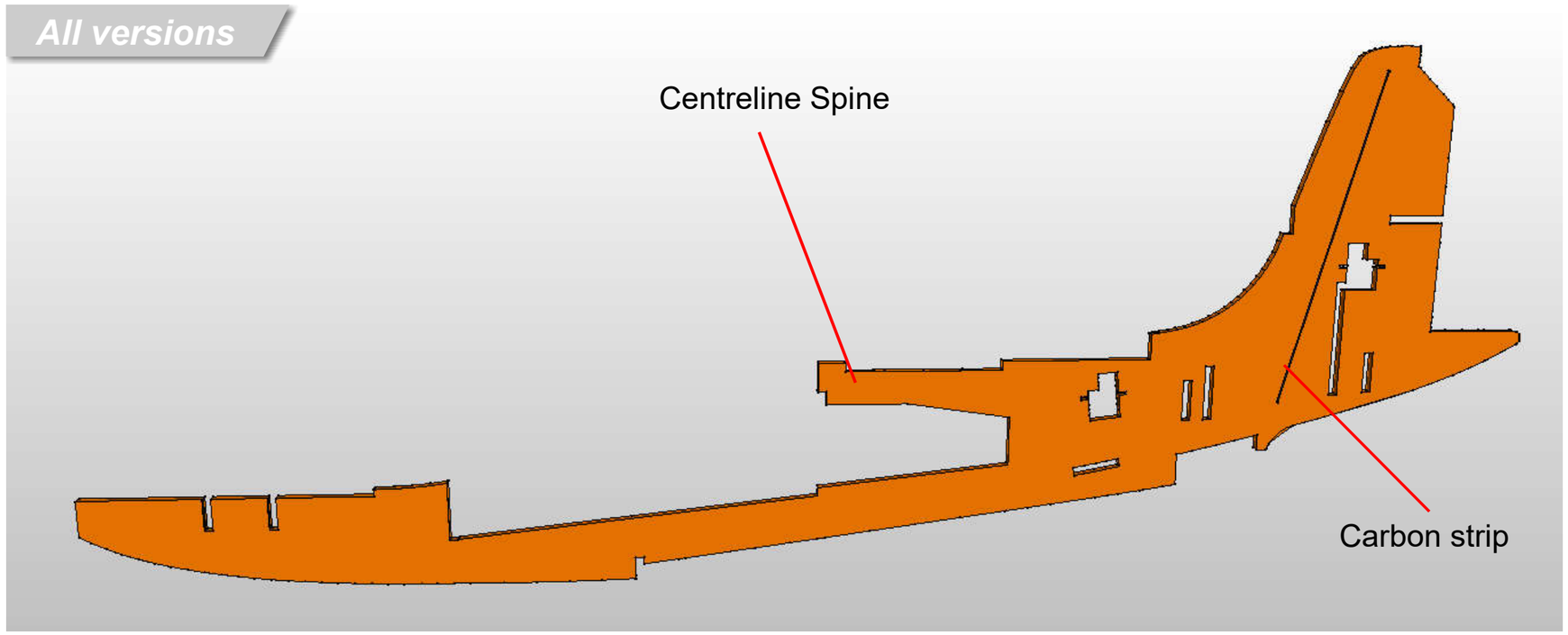

Glue the 6x1mm carbon strip into the vertical stabiliser part of the **Centerline spine**

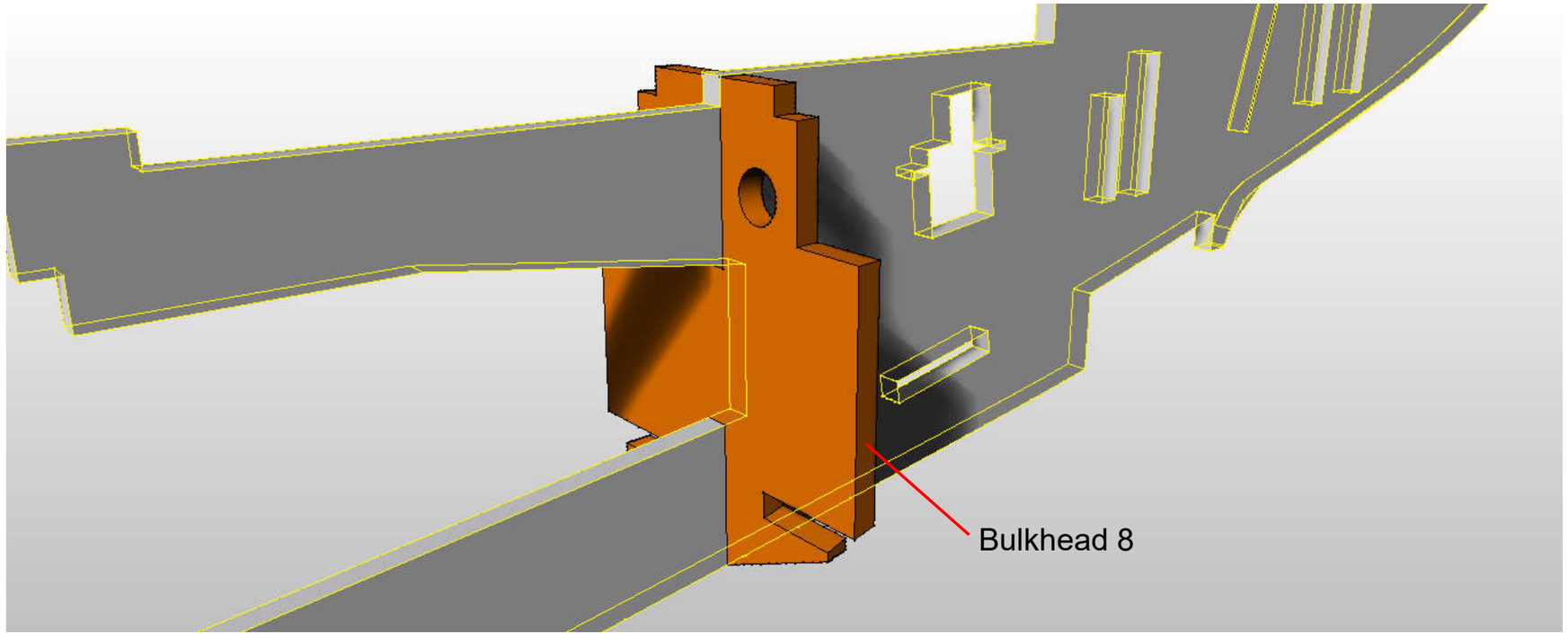

Glue **Bulkhead 8** in place.

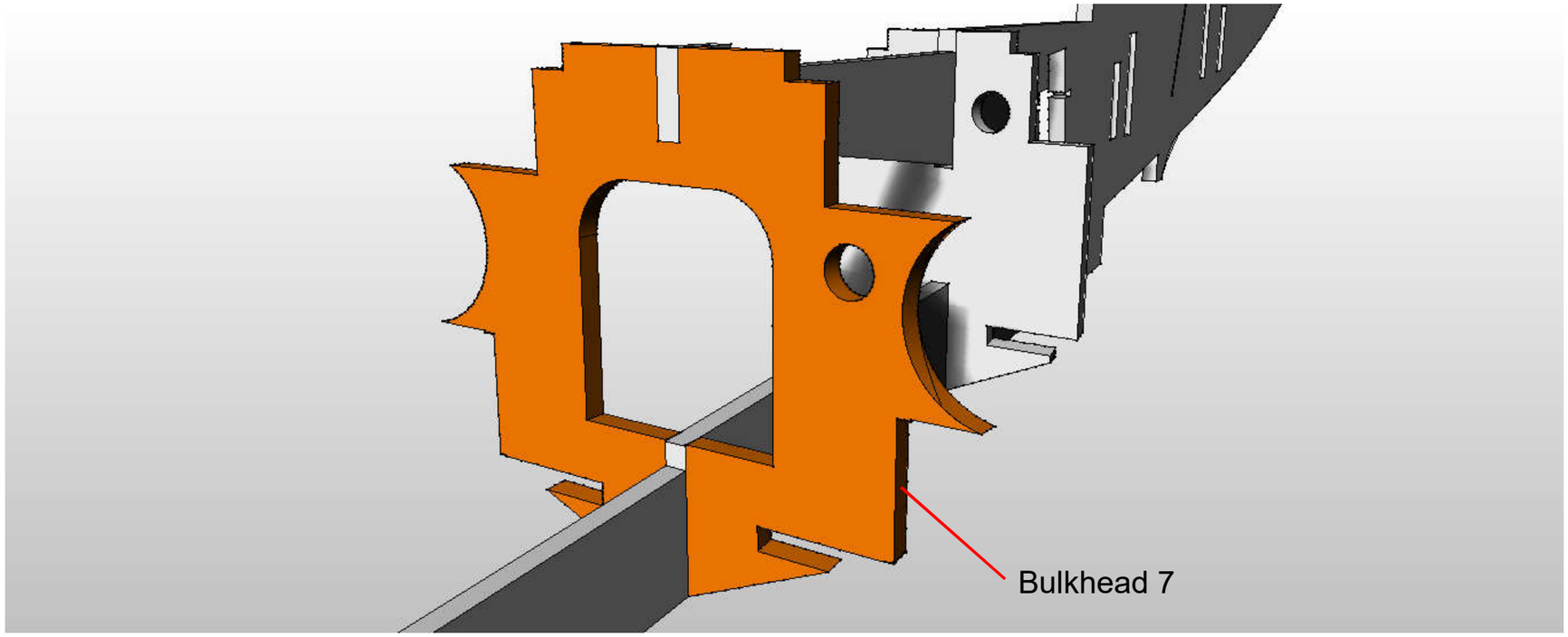

Glue **Bulkhead 7** in place.

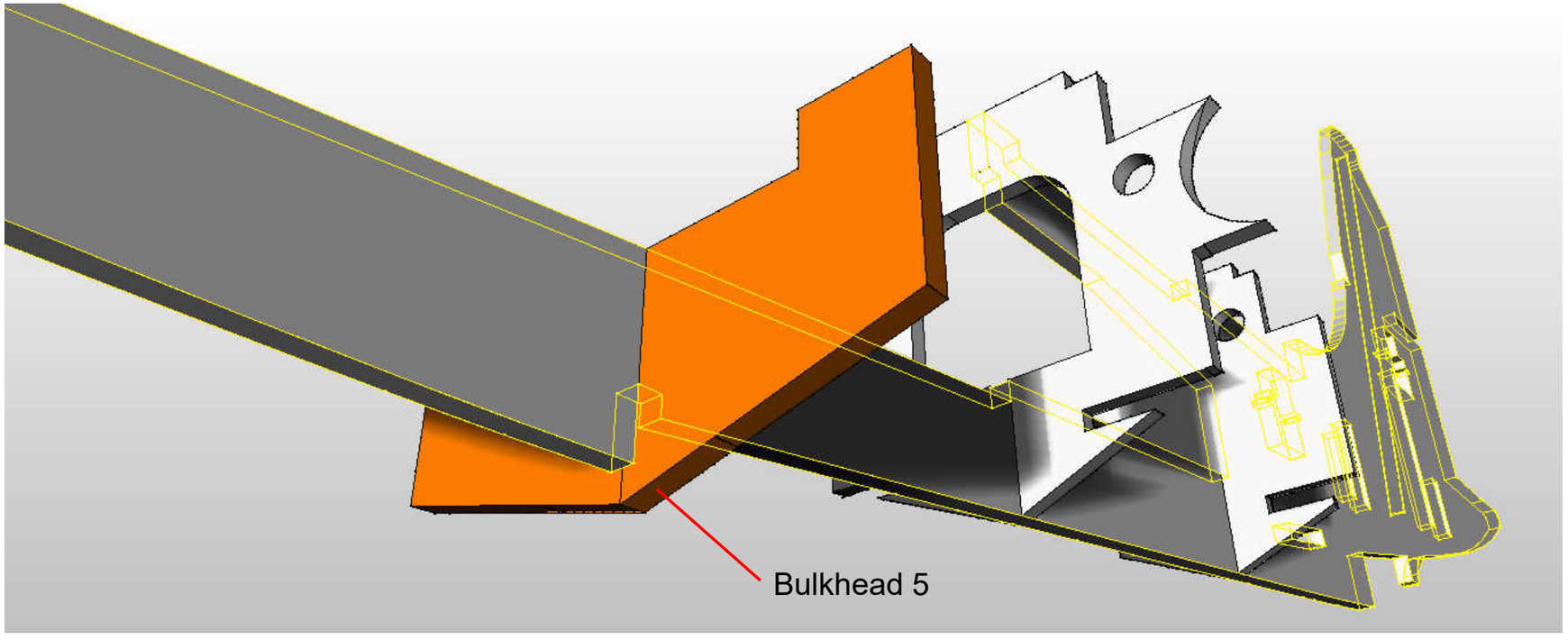

Glue **Bulkhead 5** into place.

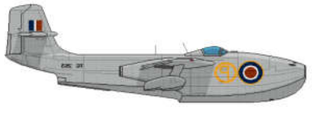

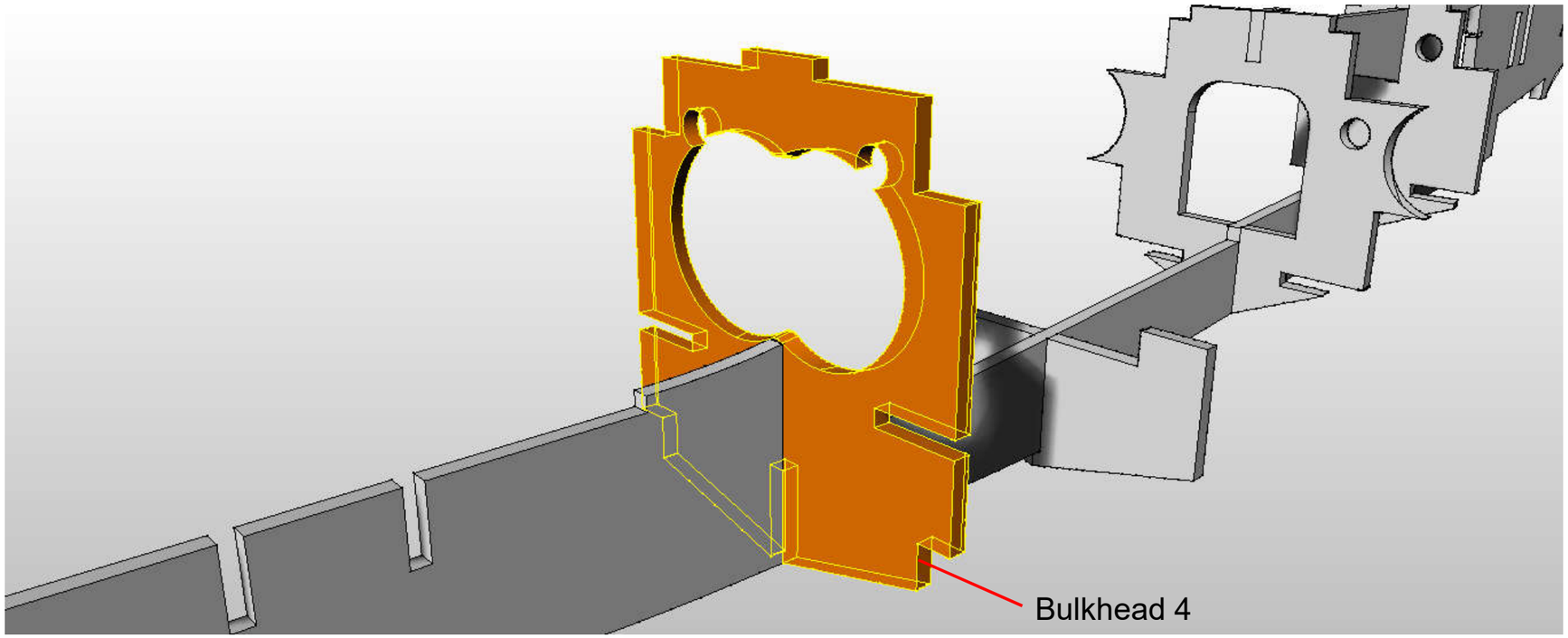

Glue **Bulkhead 4** in place.

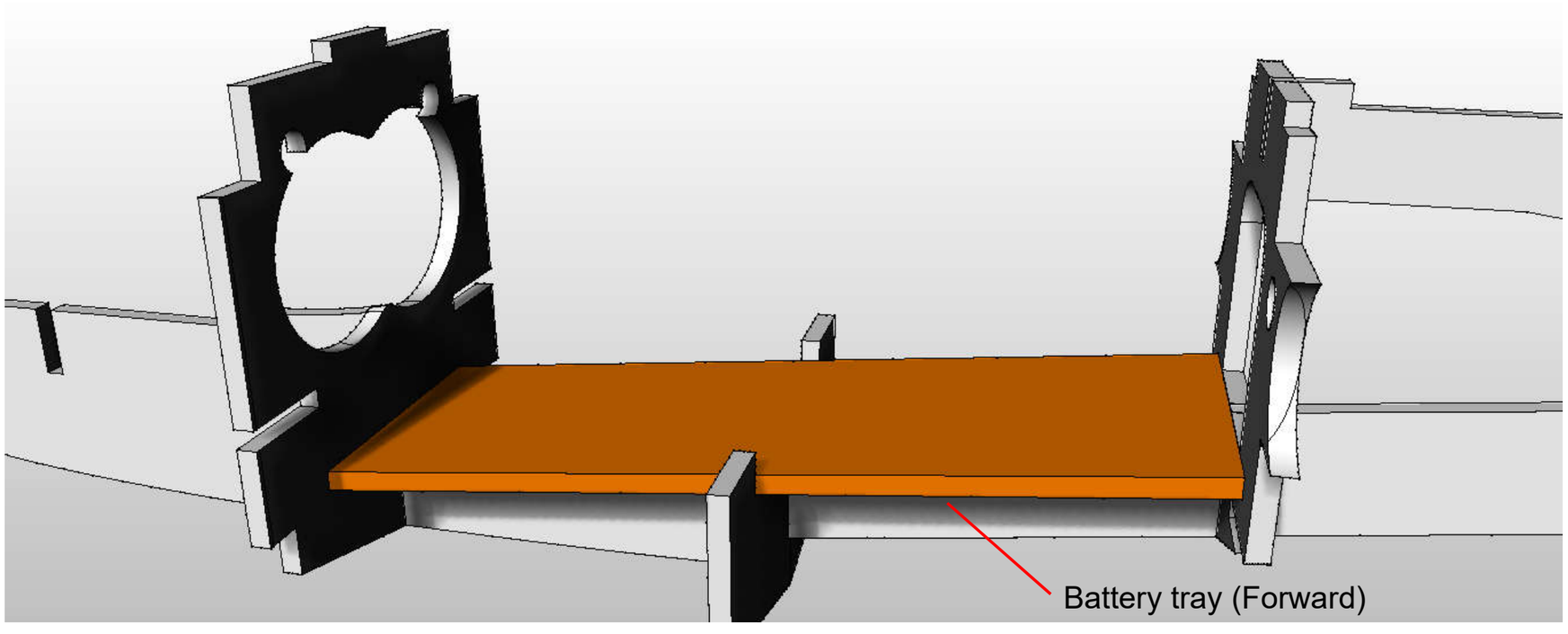

Glue **Battery Tray (forward)** in place.

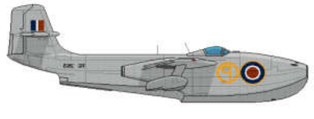

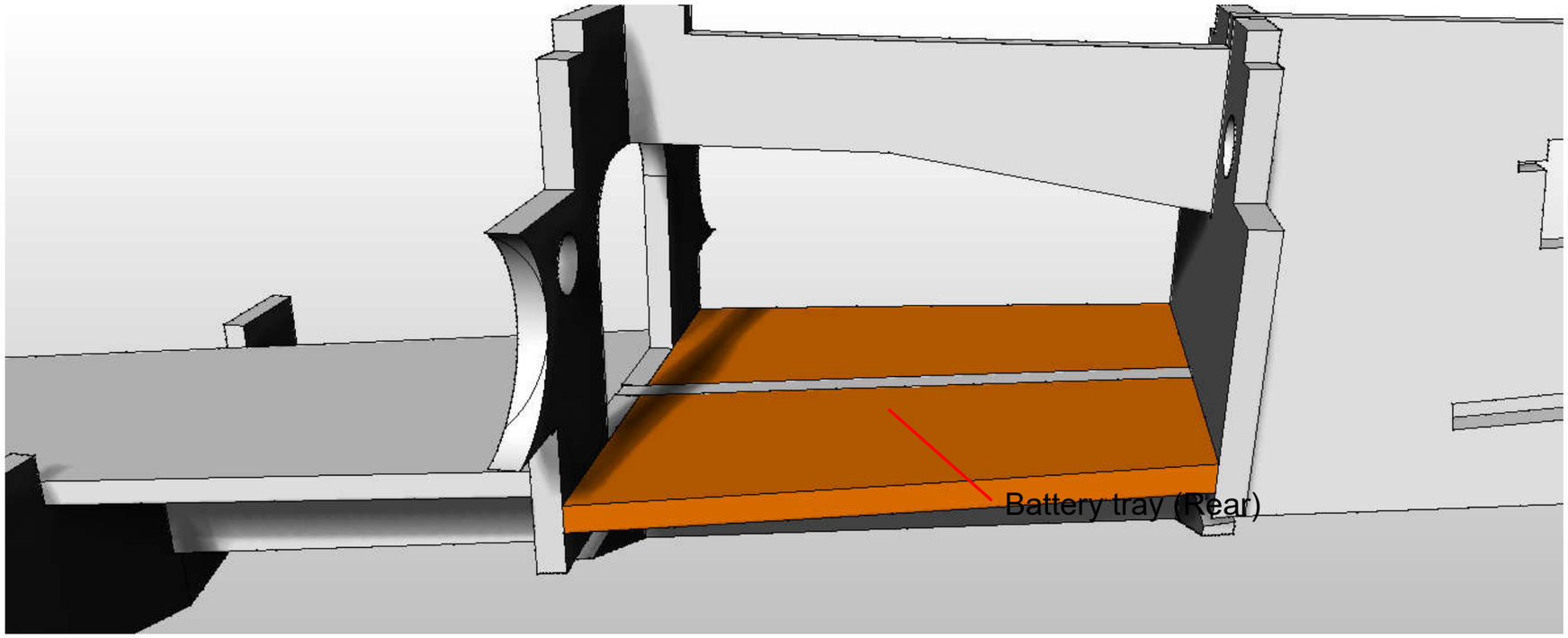

Glue the two **Battery Tray (rear)** pieces to the assembly using a non-contact adhesive such as epoxy.

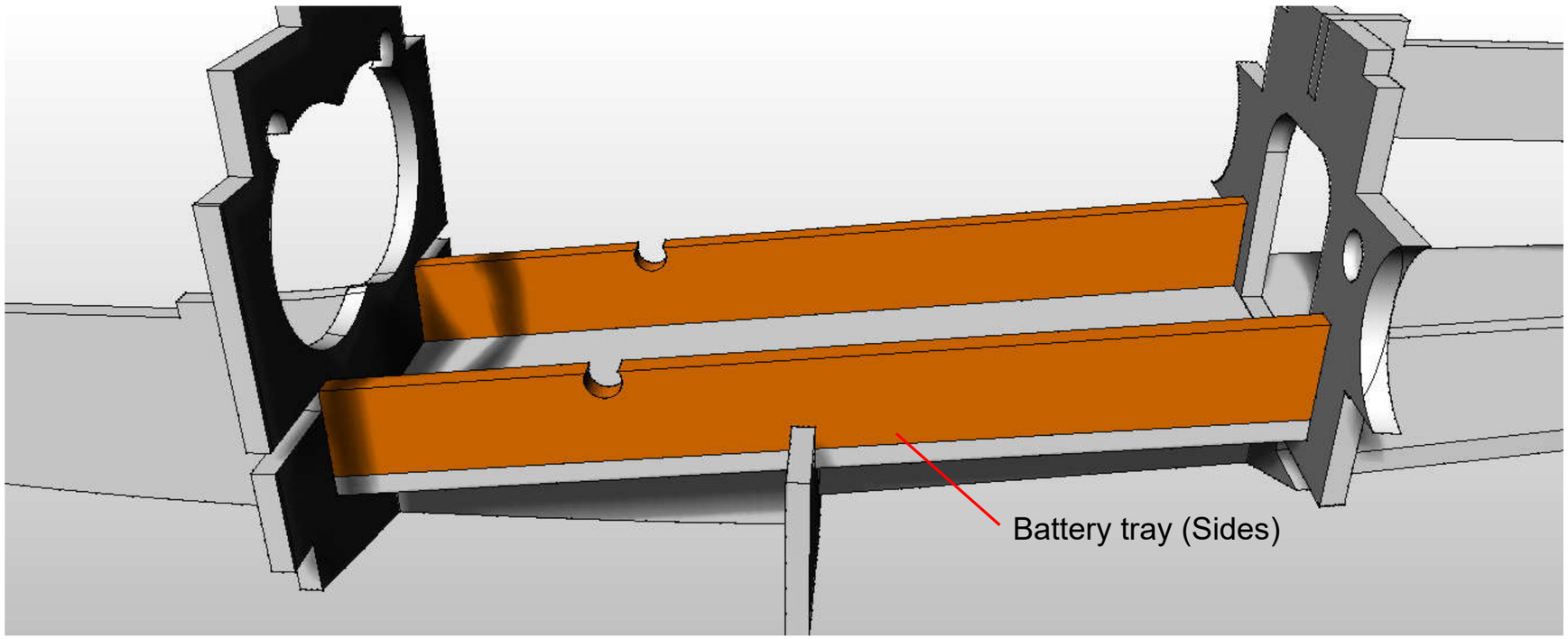

Glue **Battery Tray (sides)** in place using a non-contact adhesive such as epoxy.

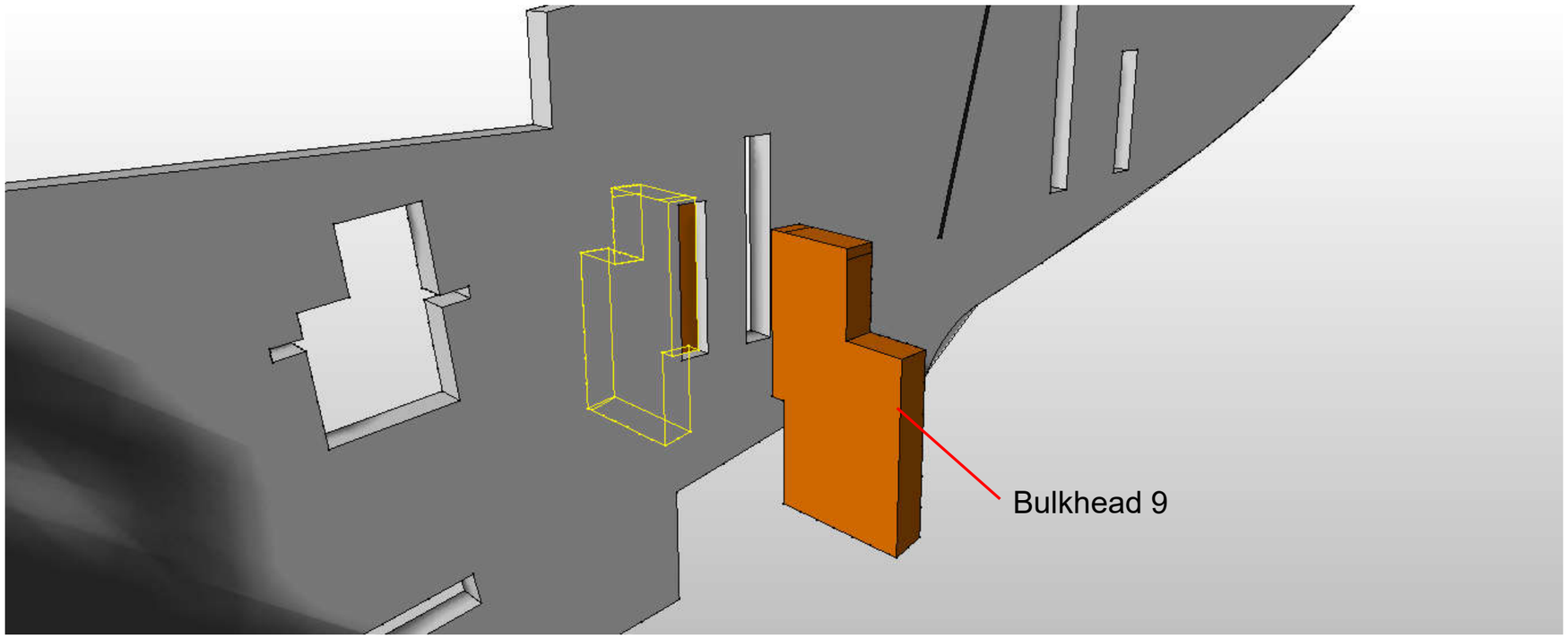

Glue the two **Bulkhead 9** pieces to the assembly.

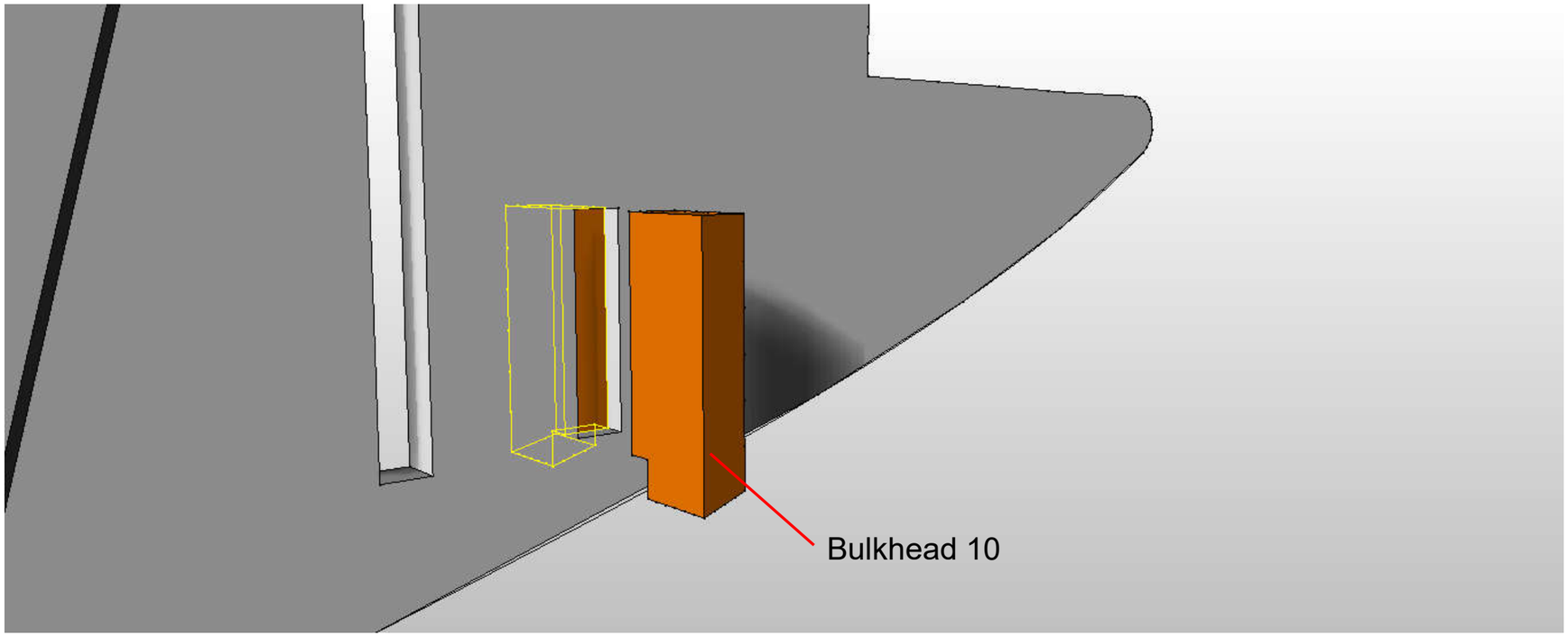

Glue the two **Bulkhead 10** pieces to the assembly.

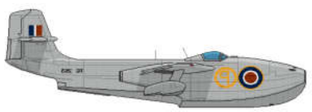

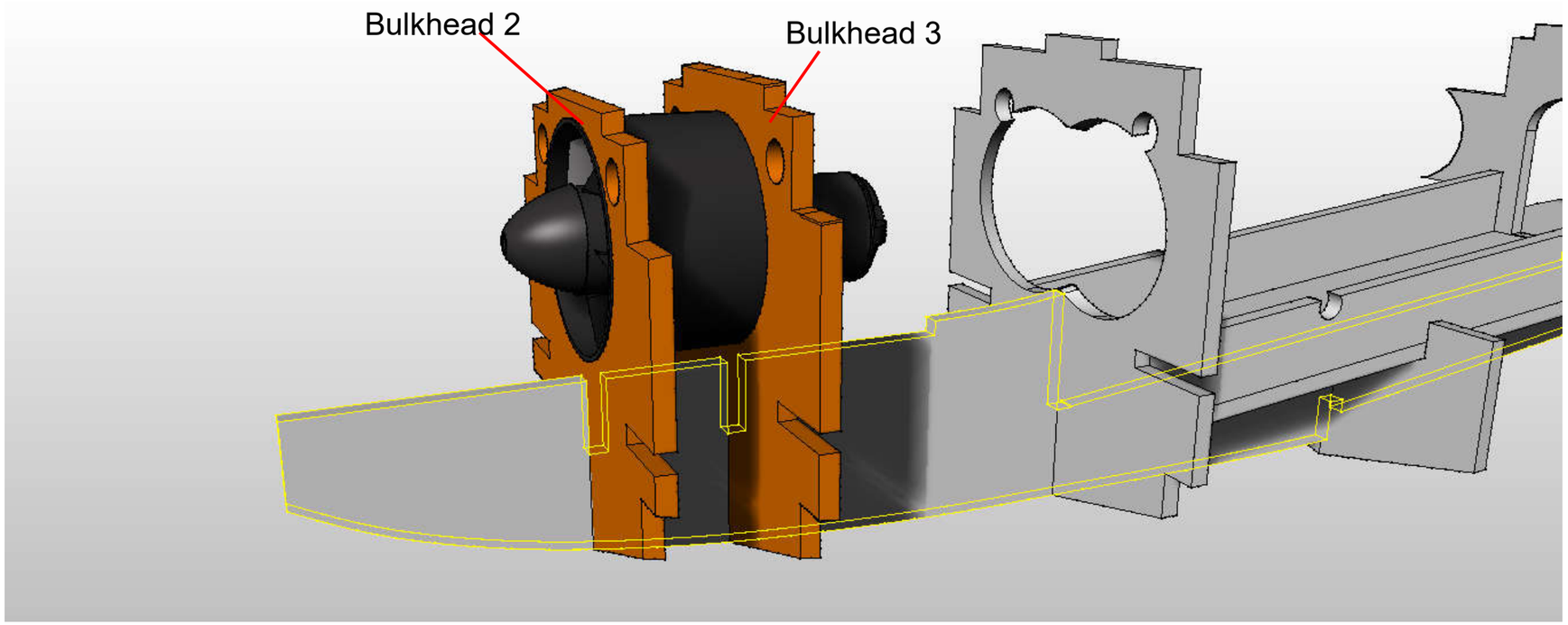

Dry-Fit the two **EDF Bulkheads** around your EDF then slide and glue onto assembly using non-contact glue such as Epoxy or BSI Foam Cure.

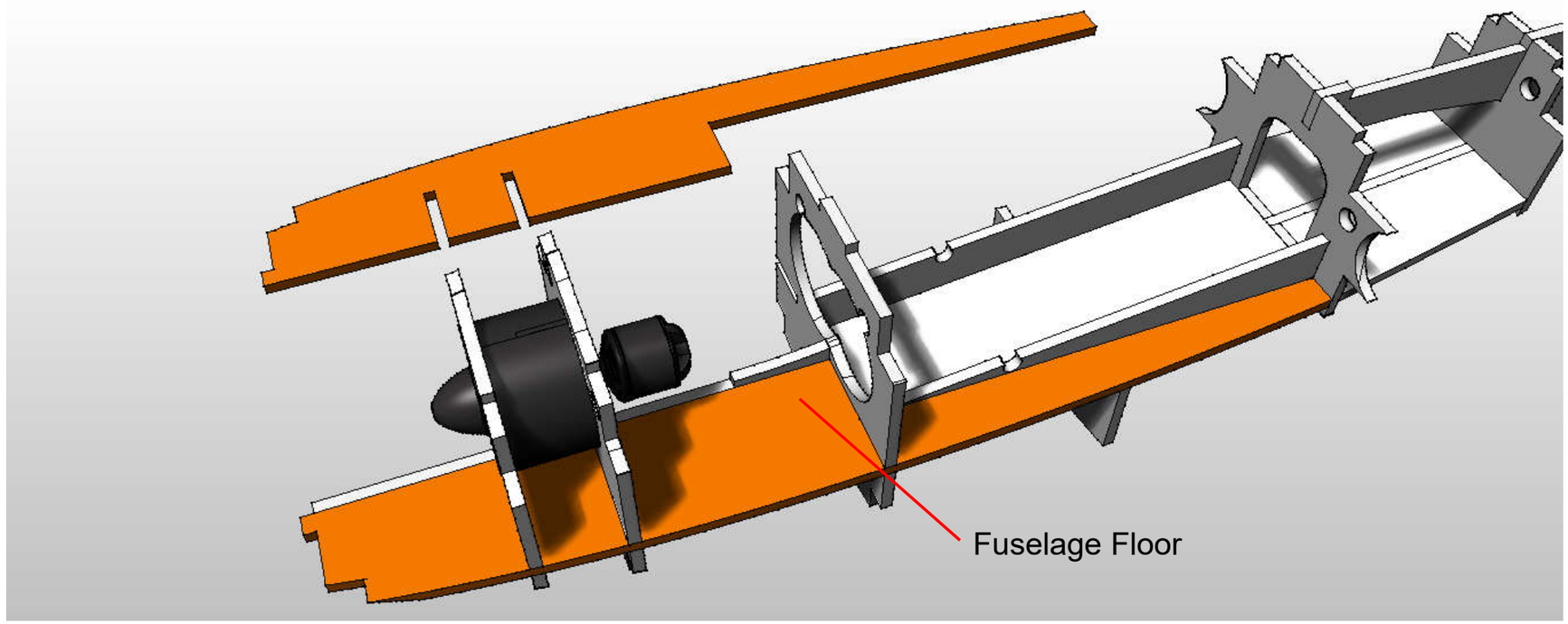

Glue the two **Fuselage Floor** pieces to the assembly.

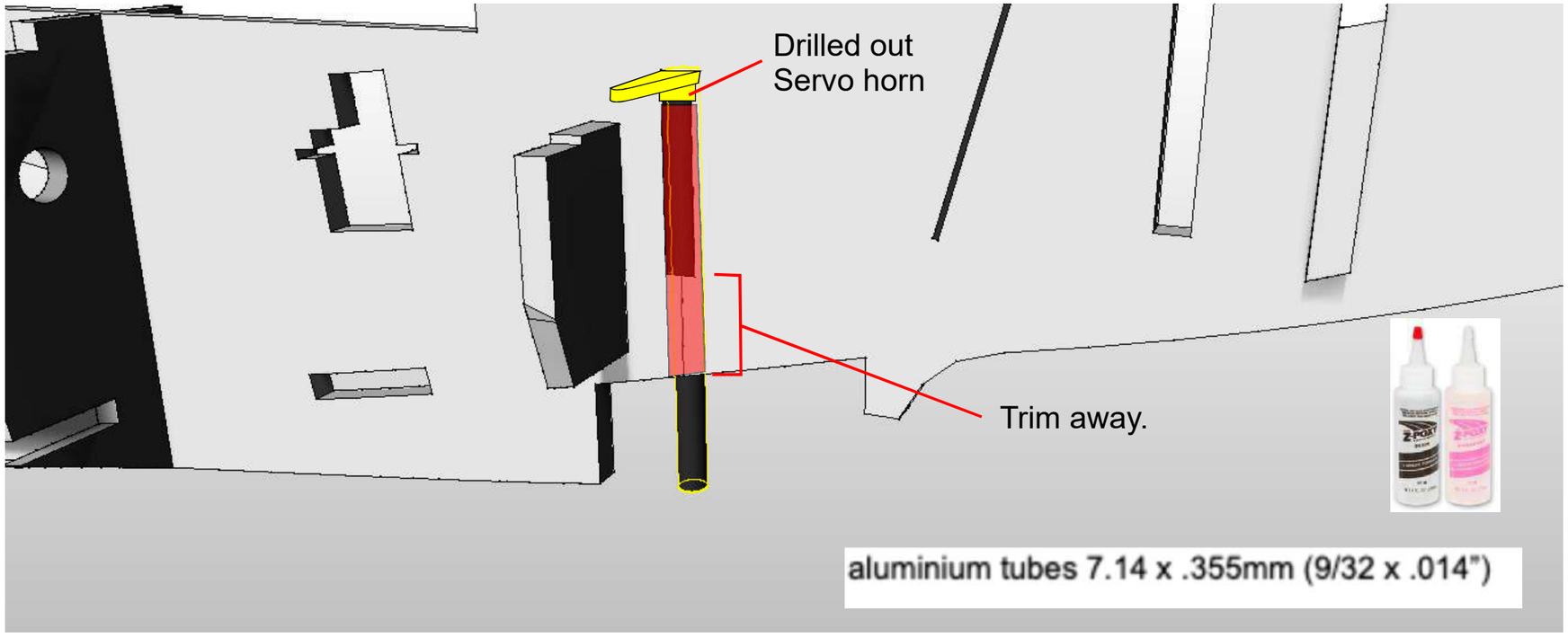

Drill out a standard sized servo horn. Glue it onto the tip of the 6mm carbon water rudder carbon tube shaft using CA glue.

Slide the tube assembly into the aluminium tube. Trim away the depron at the bottom of the slot as shown.

Carefully epoxy the aluminium into the slot ensuring that the servo horn/shaft rotates freely

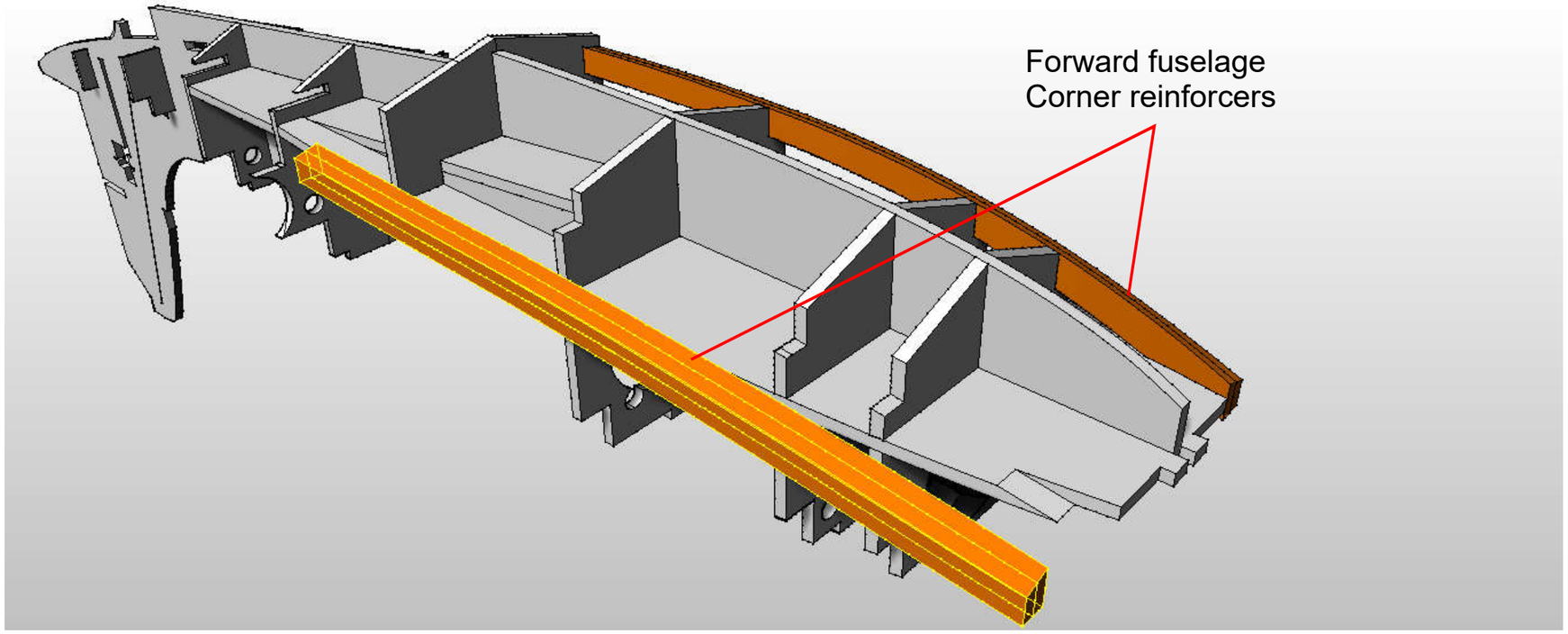

Glue together four pieces of the **Forward fuselage corner reinforcer**s, sand to shape and fit as shown.

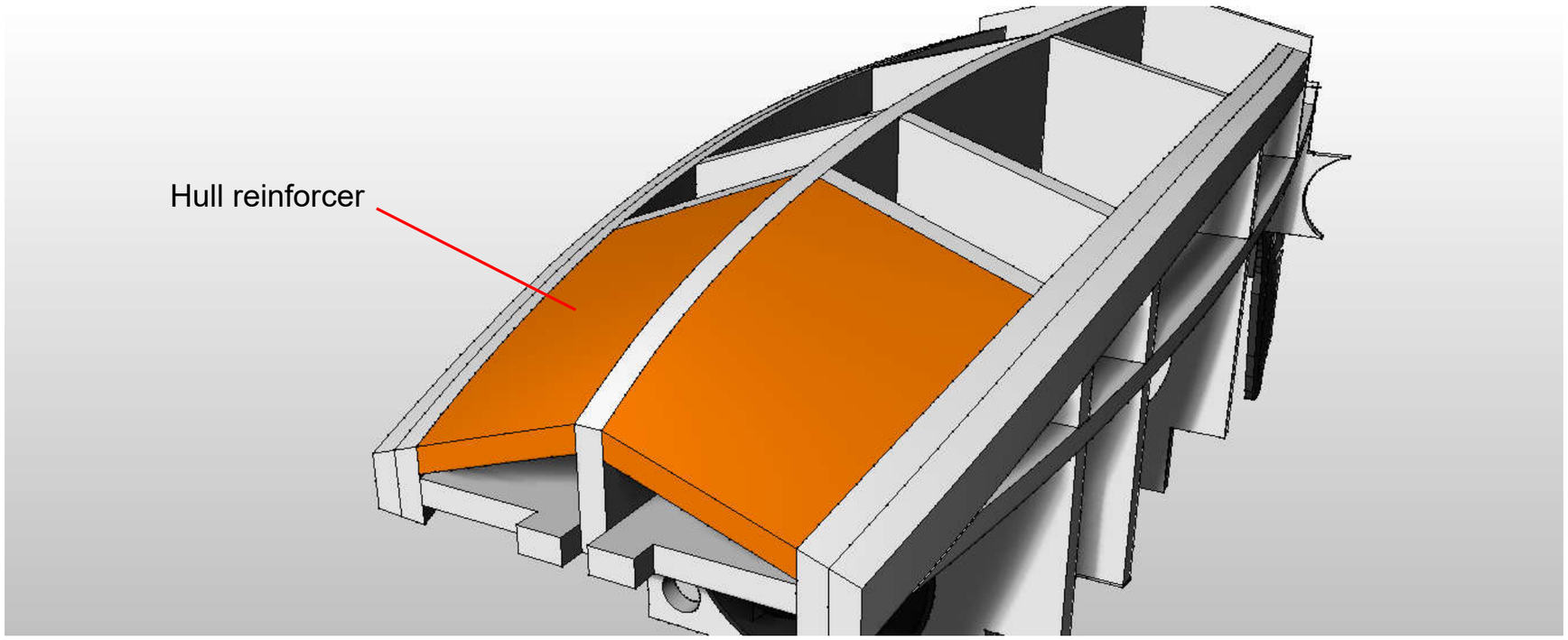

As the forward area of the hull will be shaped, glue the **Hull Reinforcer** in place with tight joints.

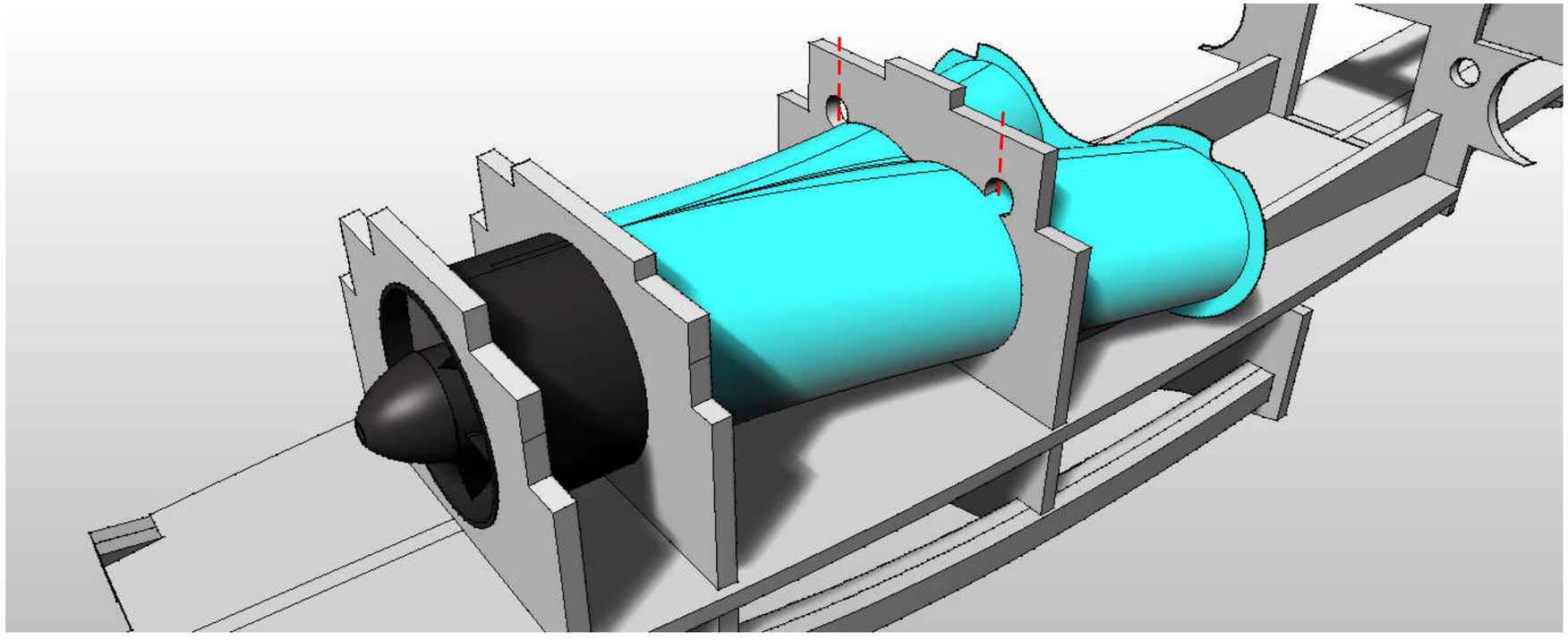

Fix the **Bifurcated Thrust Tube (Forward)** into the assembly.

Trim away the top of the bulkhead to fit it in, then close it up again ensuring it is straight.

Glue in place with dots of hot melt glue.

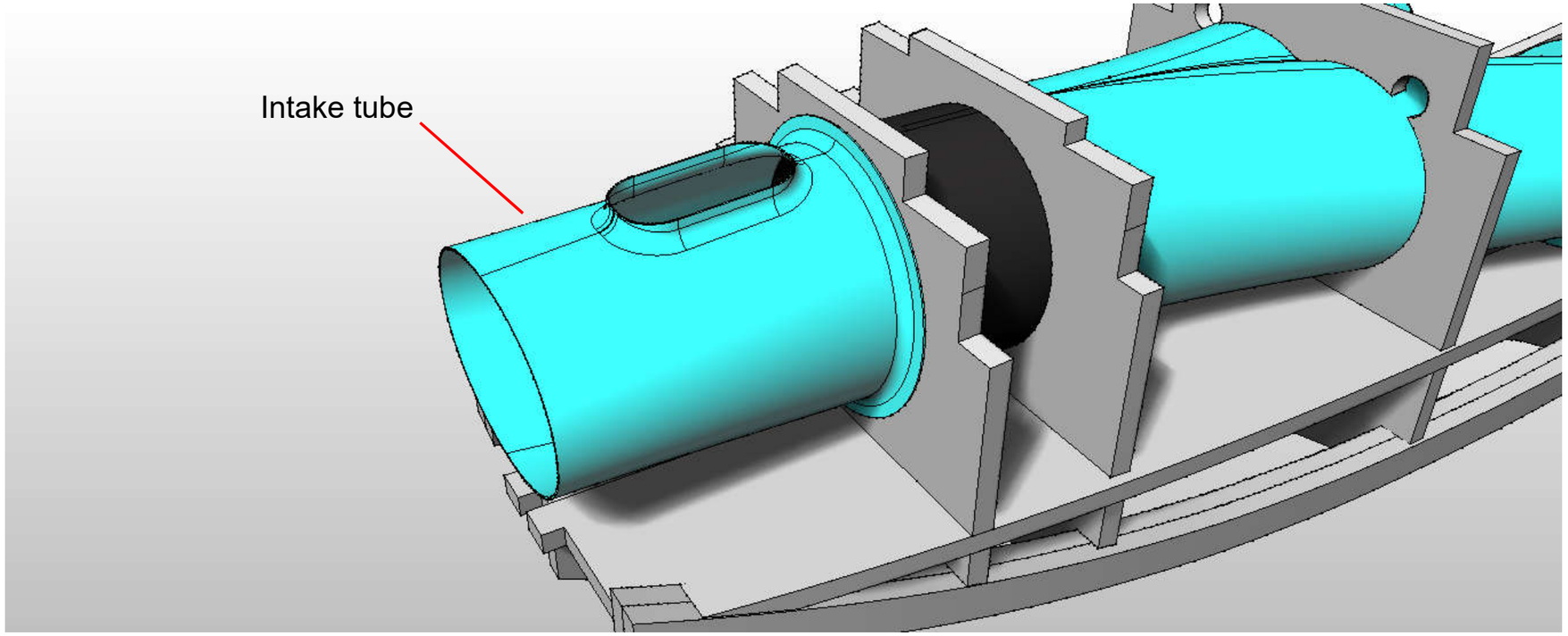

Fix the **Intake tube** into the assembly.

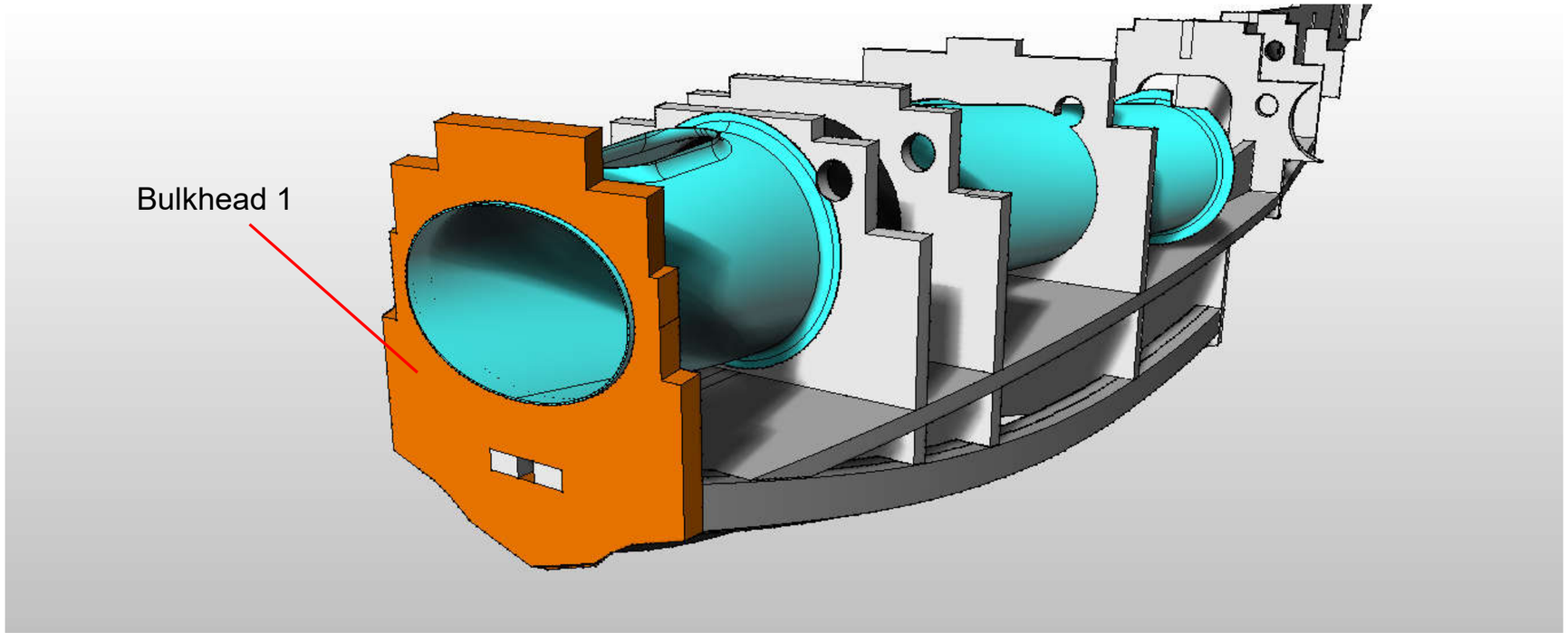

Glue **Bulkhead 1** into the assembly. The lip on the front edge protrudes 2mm and helps to align the nose.

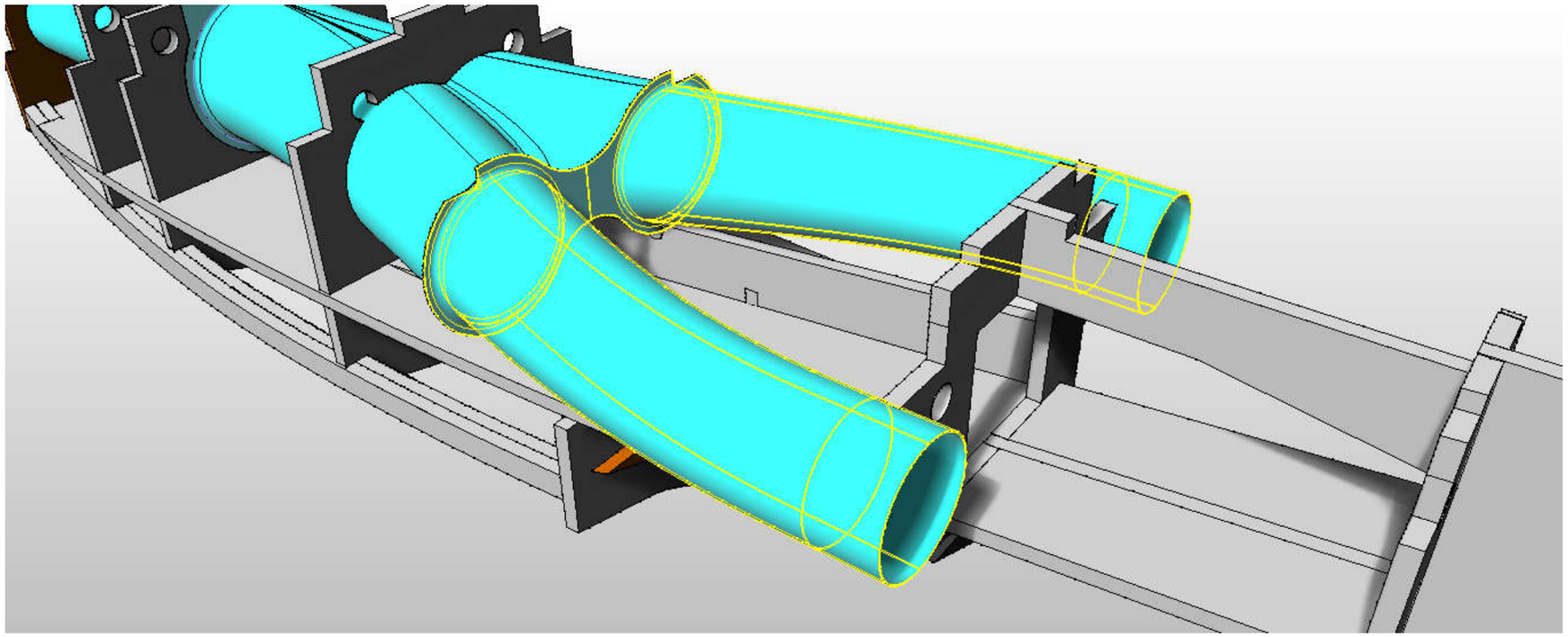

Glue the **Bifurcated Thrust tubes** into the assembly. aligning the exhaust end into the supporting shapes on the bulkhead.

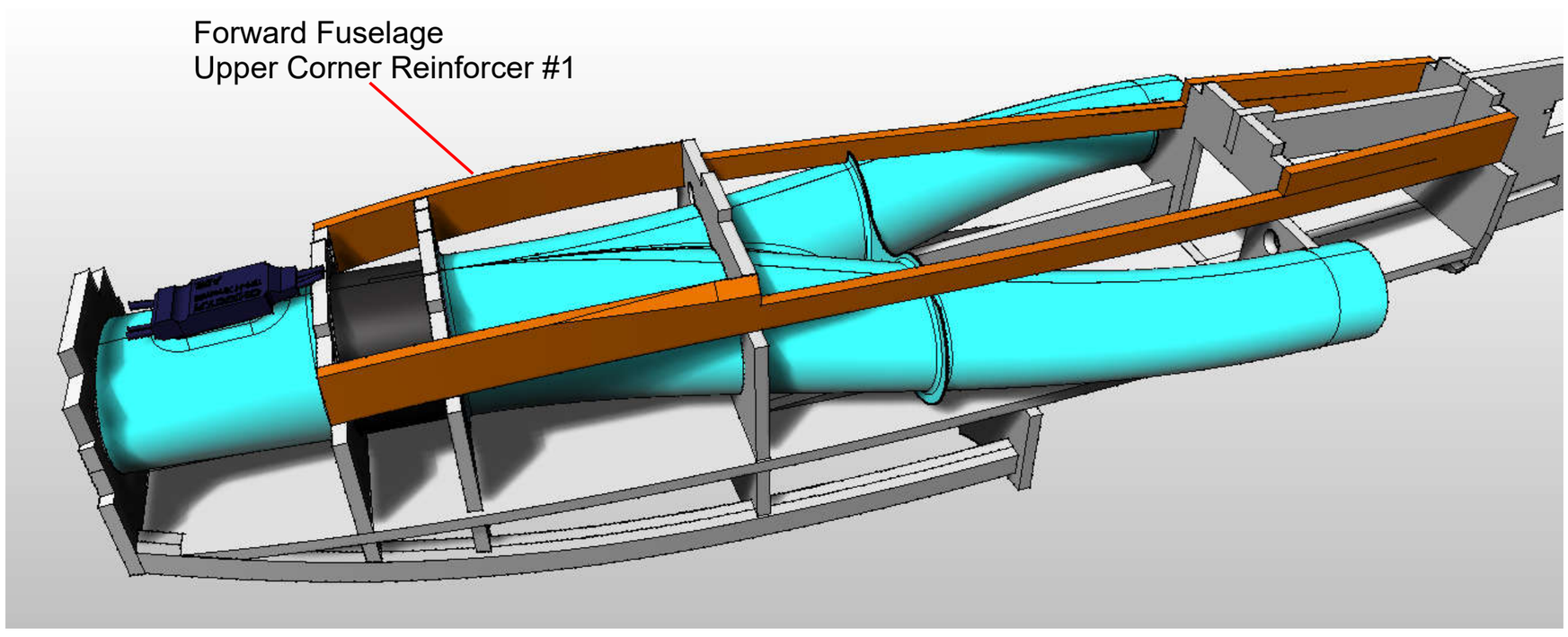

Glue the **Forward Fuselage Upper Corner Reinforcer #1** in place.

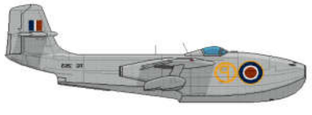

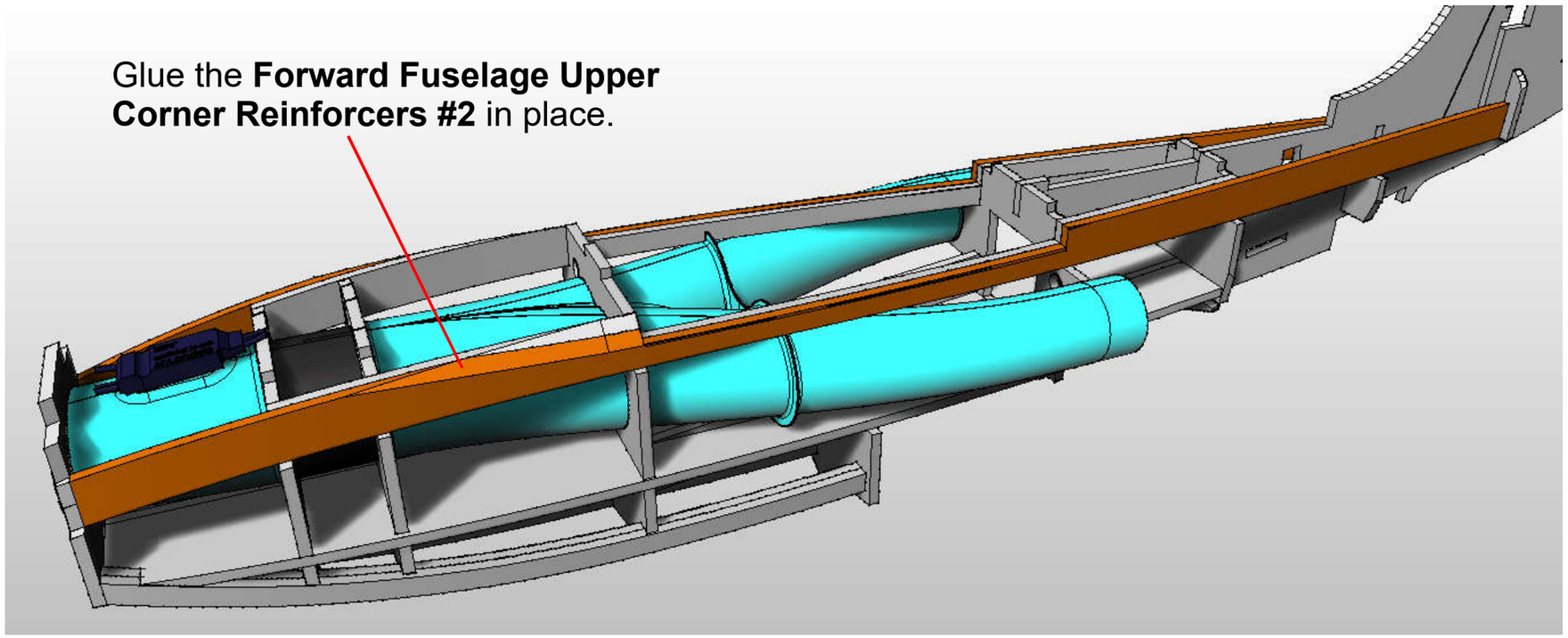

Glue the **Forward Fuselage Upper Corner Reinforcer #2** in place.

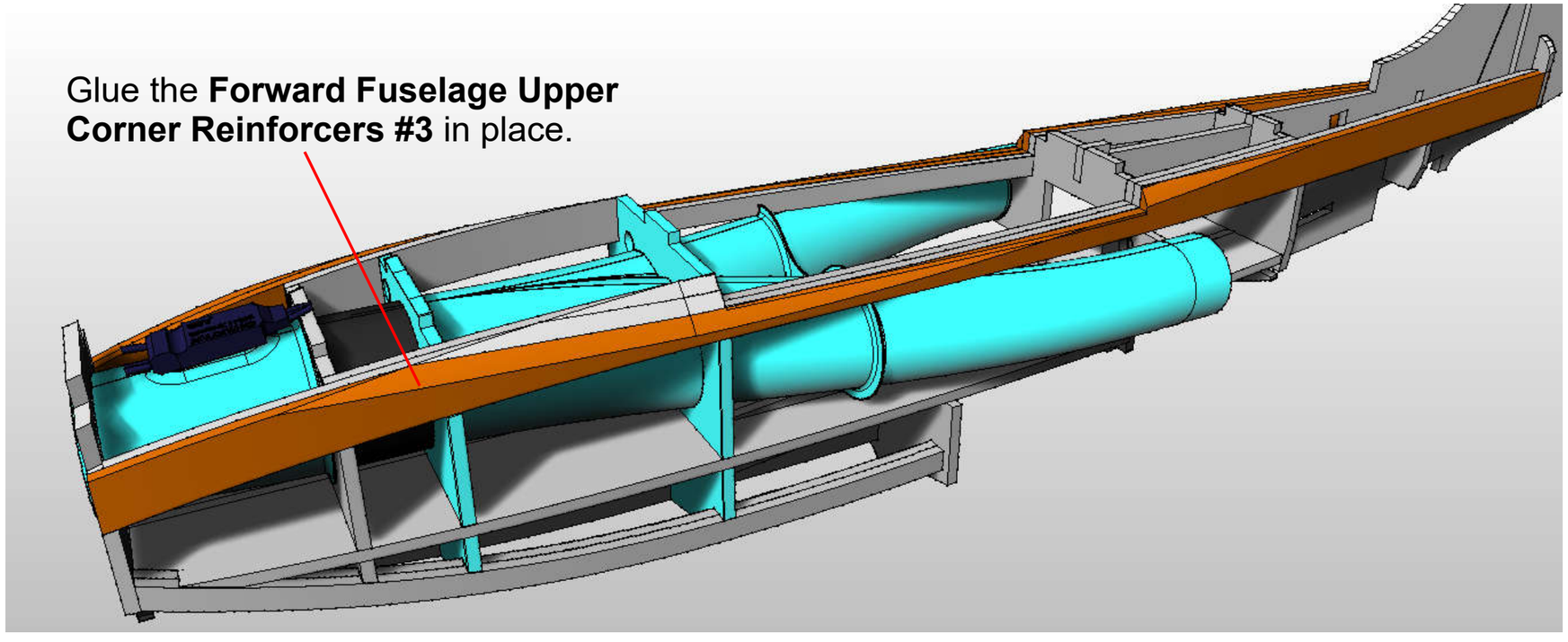

Glue the **Forward Fuselage Upper Corner Reinforcer #3** in place.

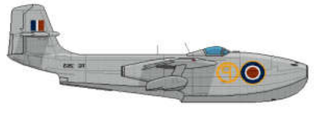

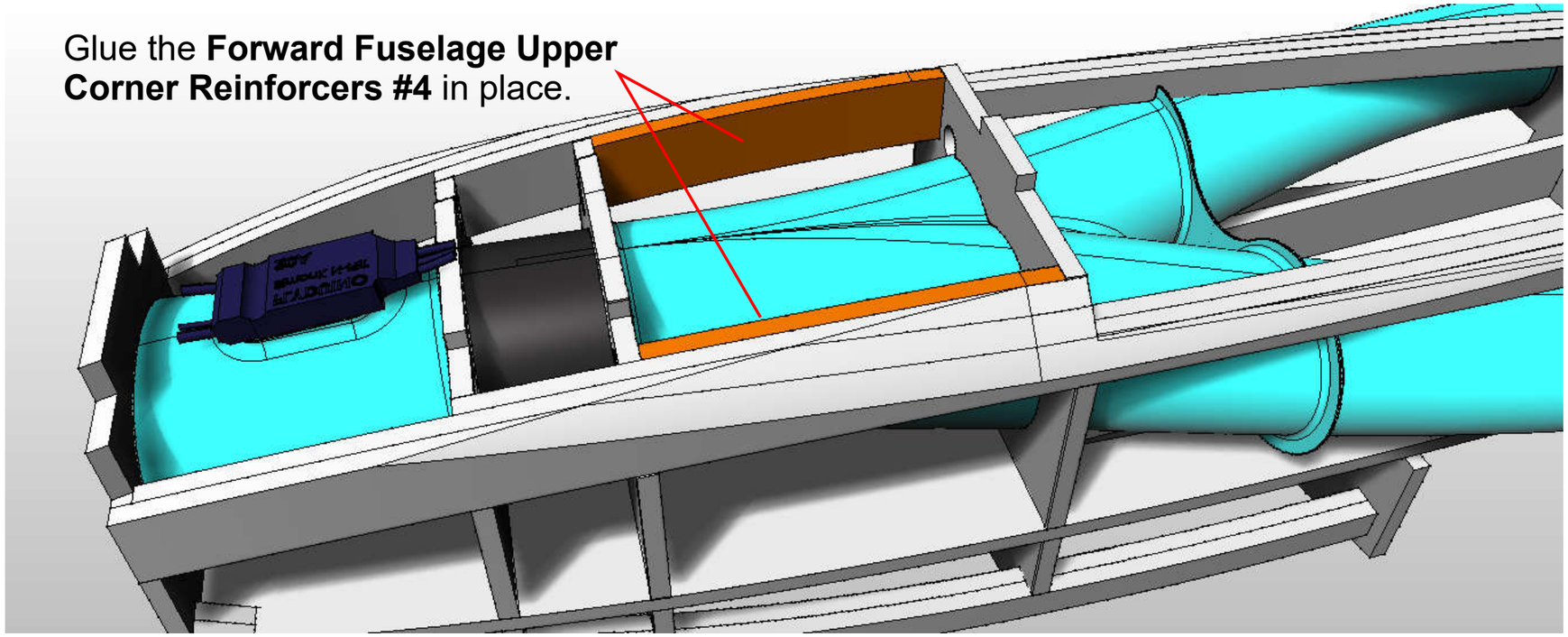

Glue the **Forward Fuselage Upper Corner Reinforcer #4** in place.

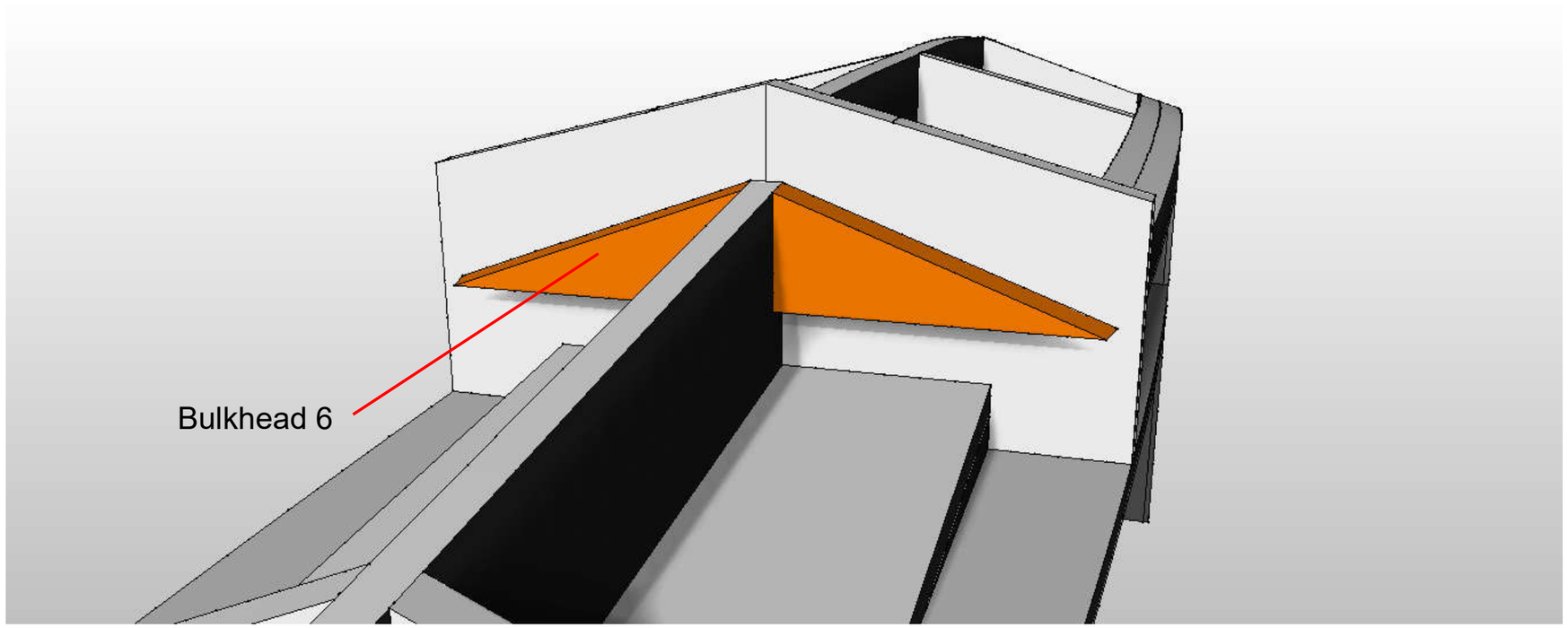

Using the guidelines drawn on the plans, glue the two **Bulkhead 6** pieces to the assembly.

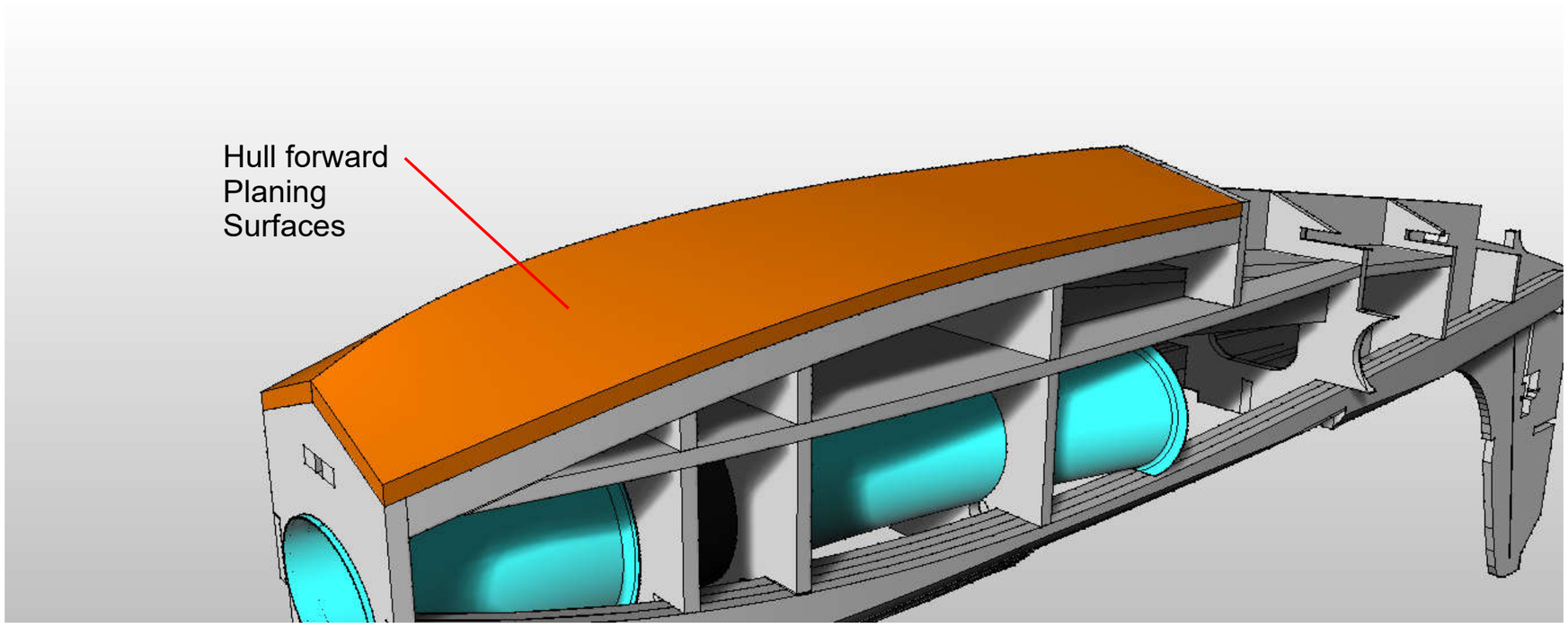

Glue the **Hull planing surfaces** onto the assembly.

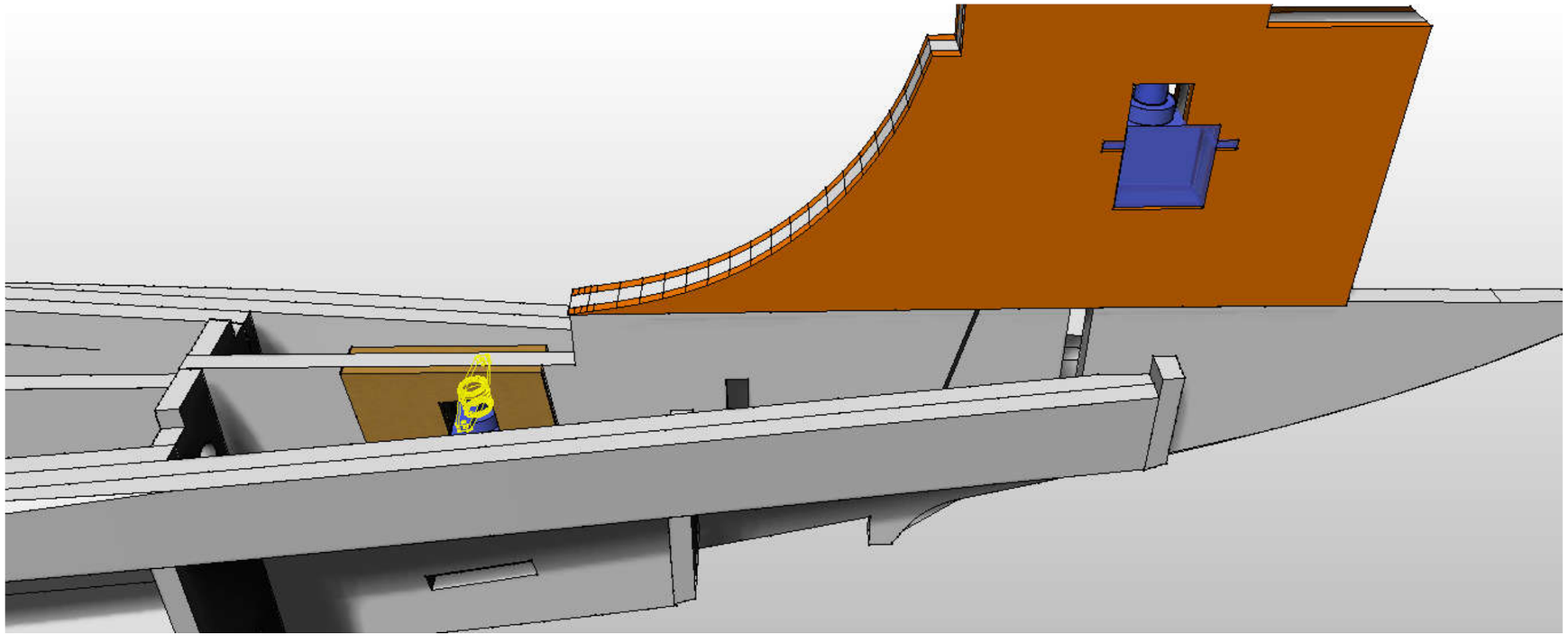

Run the elevator servo wires into the channel, and then glue the two **3mm Vertical Stabiliser sides** in place encapsulating the wires.

Glue the 2 x Liteply 3mm rudder servo reinforcer in place either side of the spine.

Glue both servos in place using hot melt glue, NOTE : file away areas where the servo horns might collide.

Use a double horn on the rudder servo, to enable air rudder and water rudder on each side of the vertical stabiliser.

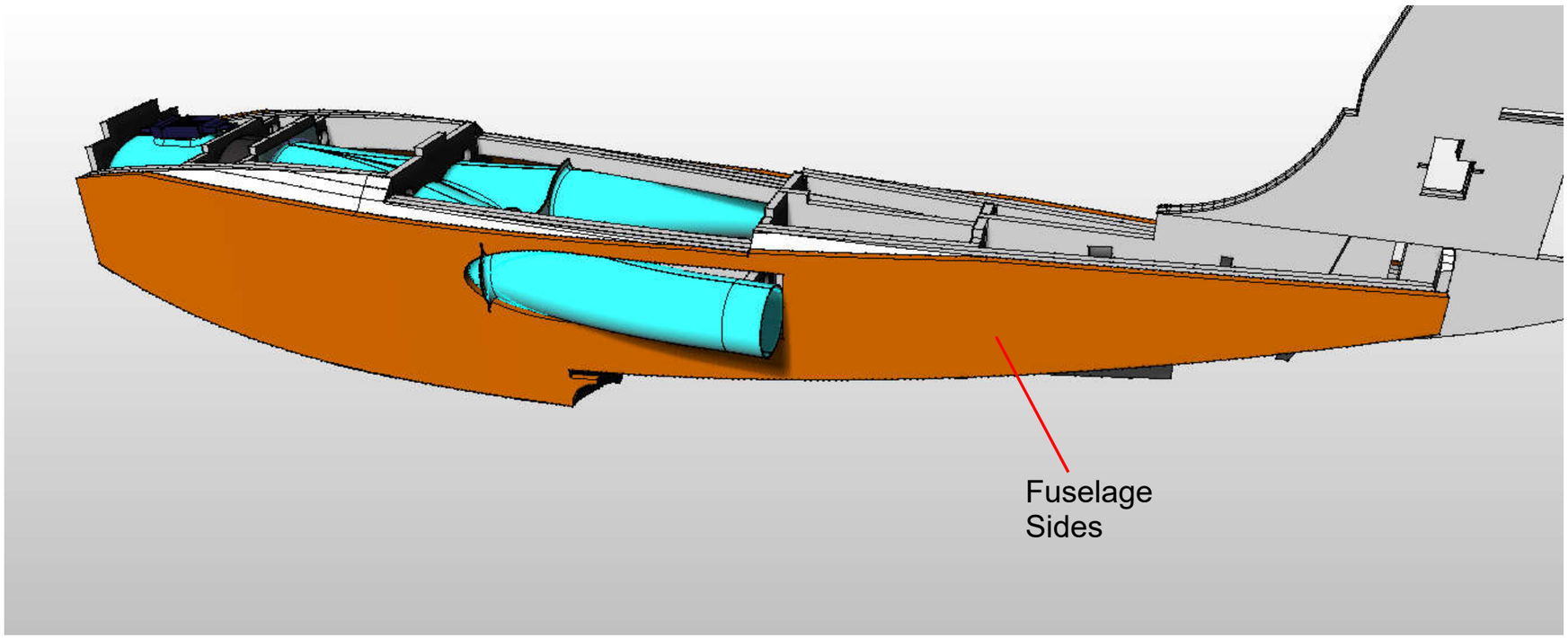

Glue the **Fuselage sides** onto the assembly.

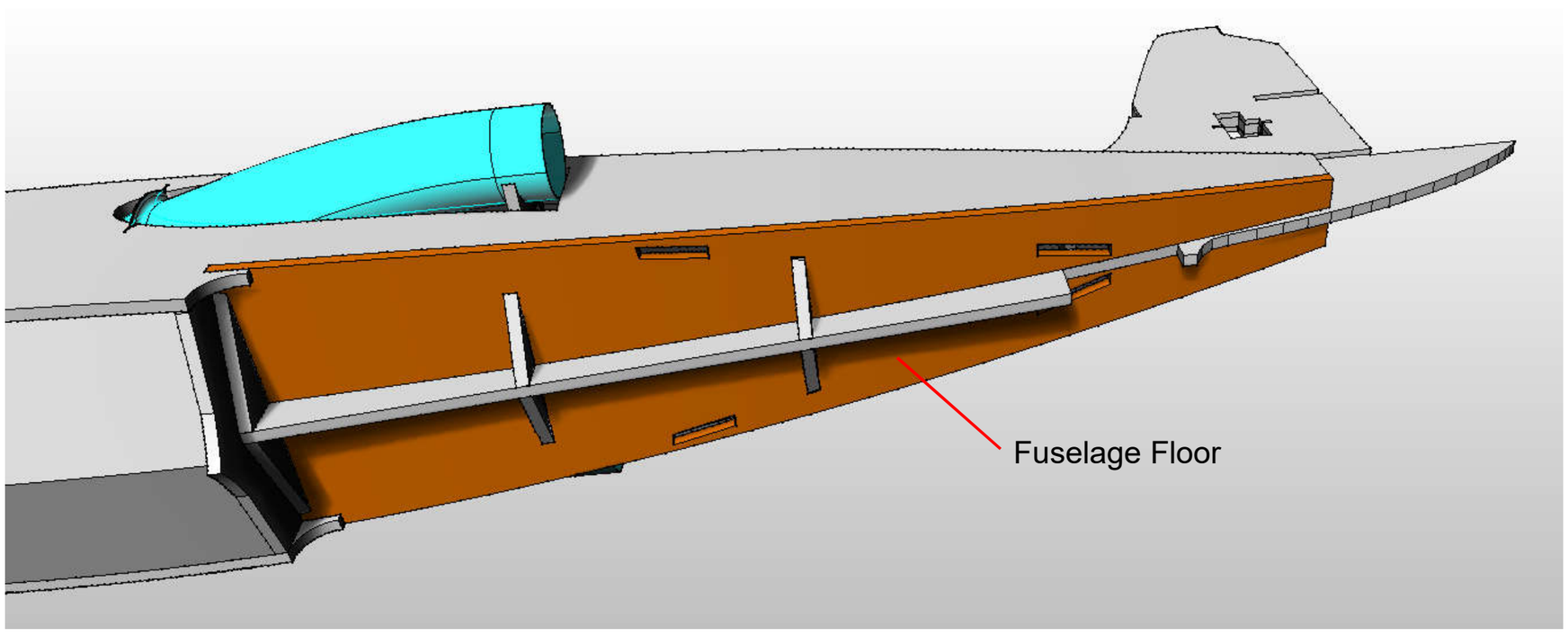

Glue the two **Fuselage Floor** pieces to the assembly.

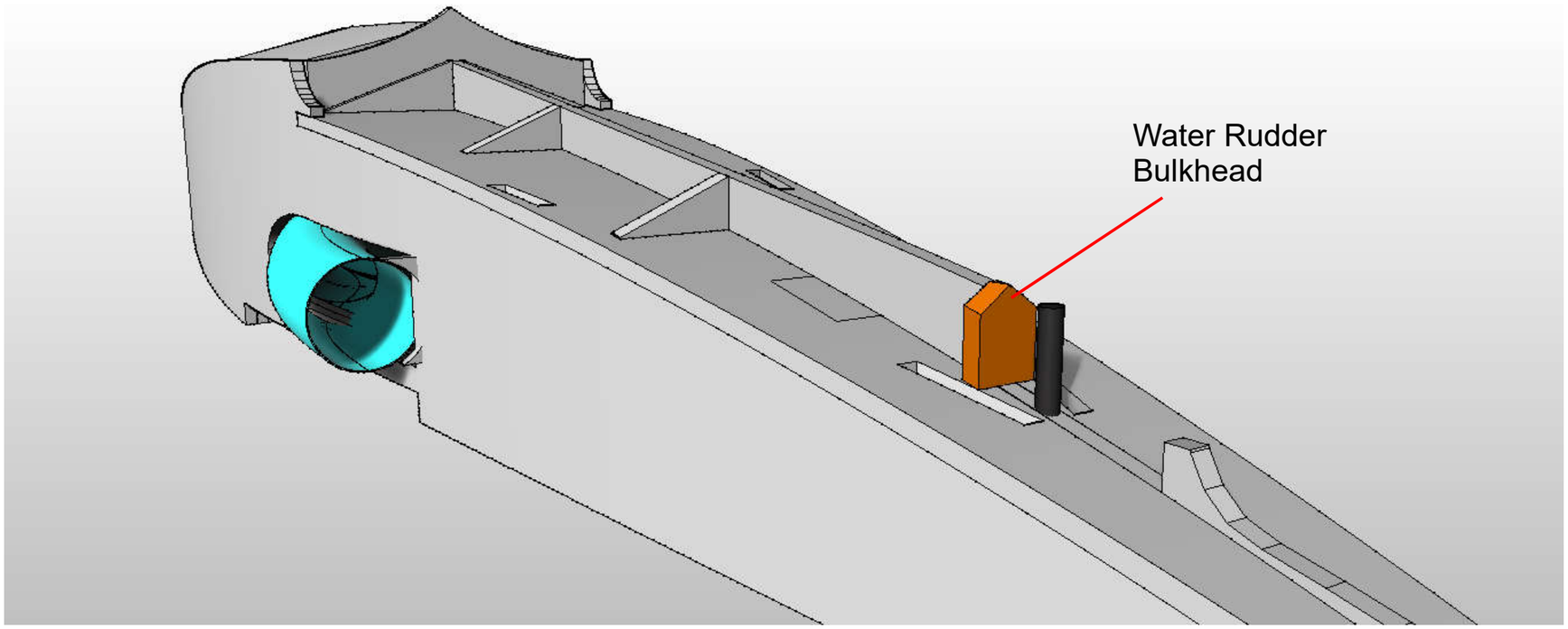

Glue the **Water Rudder Bulkhead** onto the assembly.

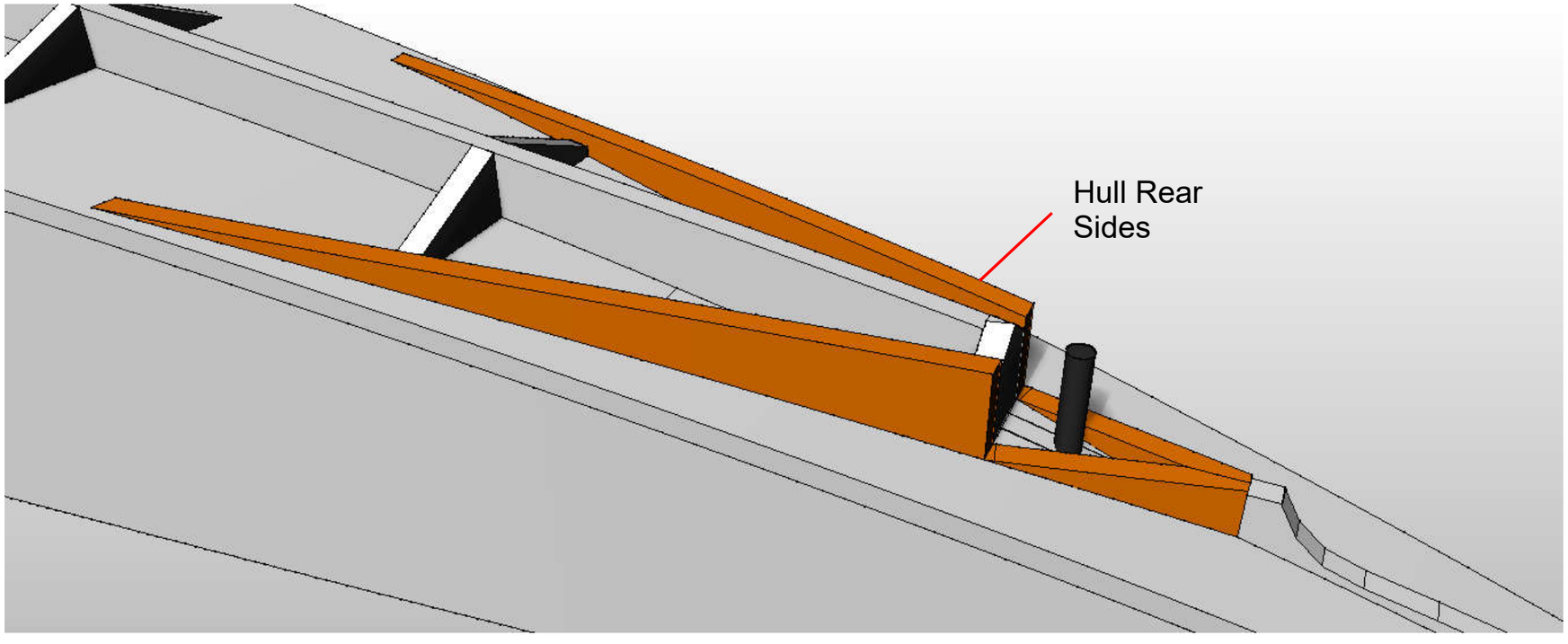

Glue the **Hull Rear sides** onto the assembly.

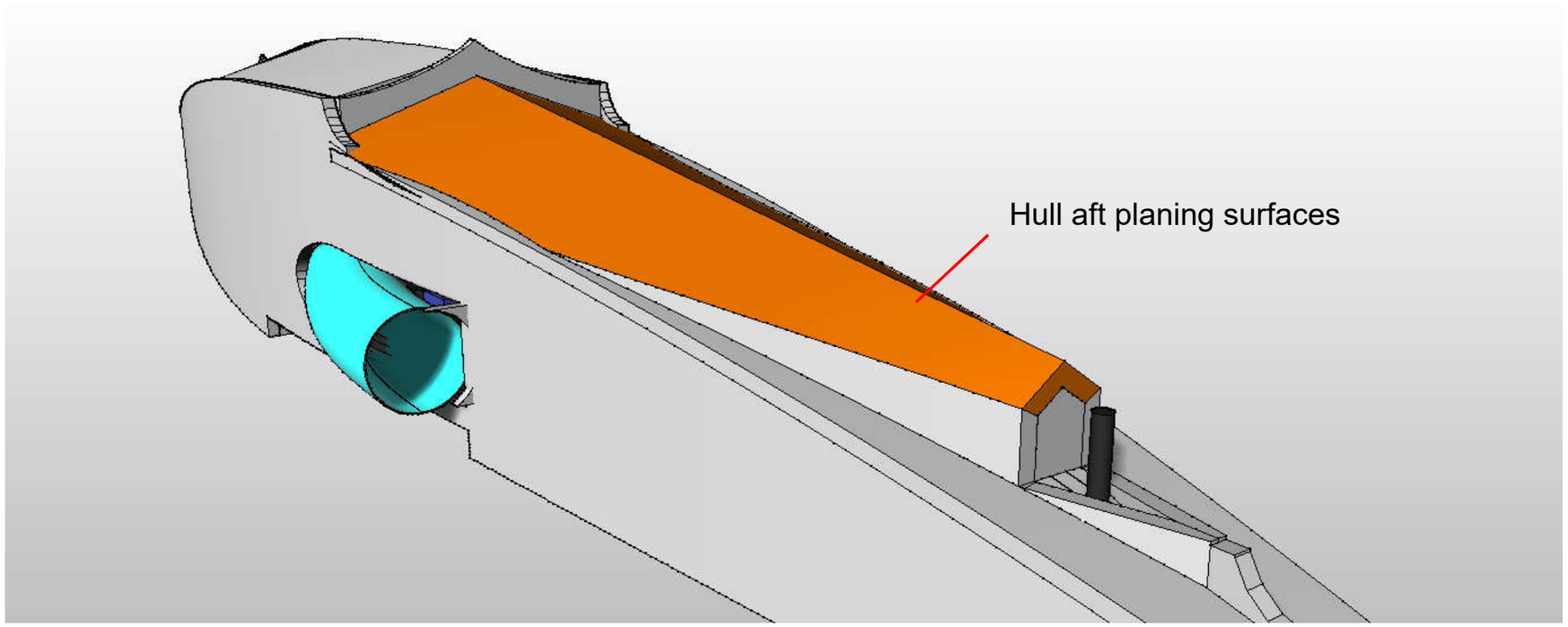

Glue the **Hull aft planing surfaces** onto the assembly.

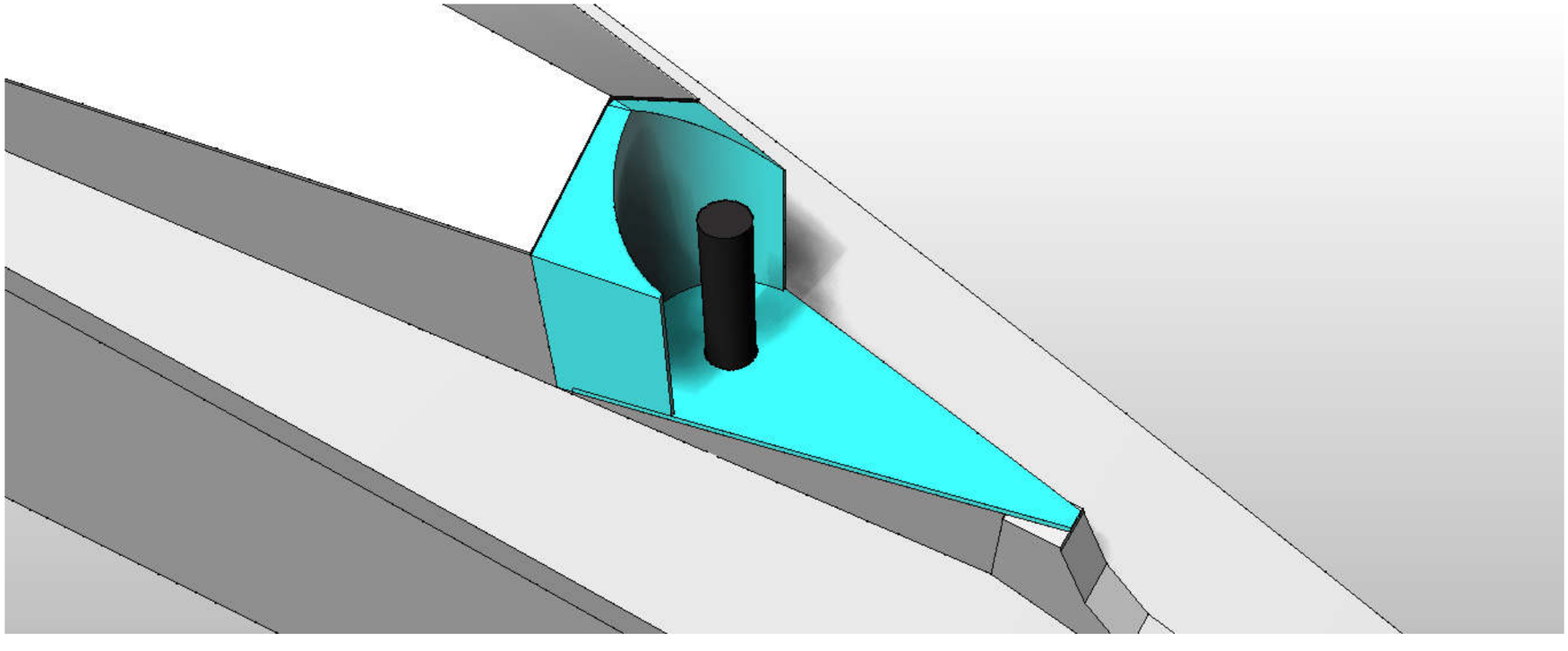

Glue the 3D printed rudder bracket onto the assembly using Microballoons mixed with epoxy.

Ensure no glue gets onto the shaft and that it turns freely.

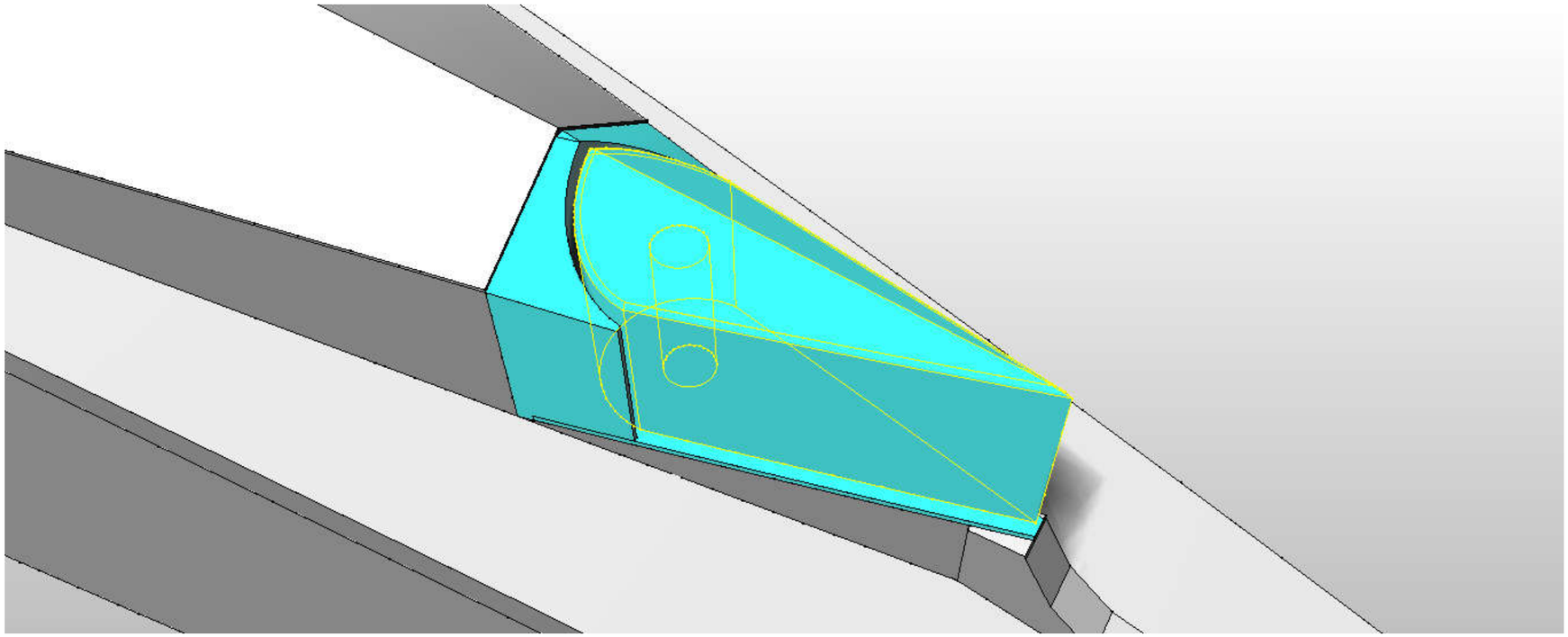

Glue the **3D printed Rudder** to the rudder shaft using CA glue.

Ensure the rudder swings freely.

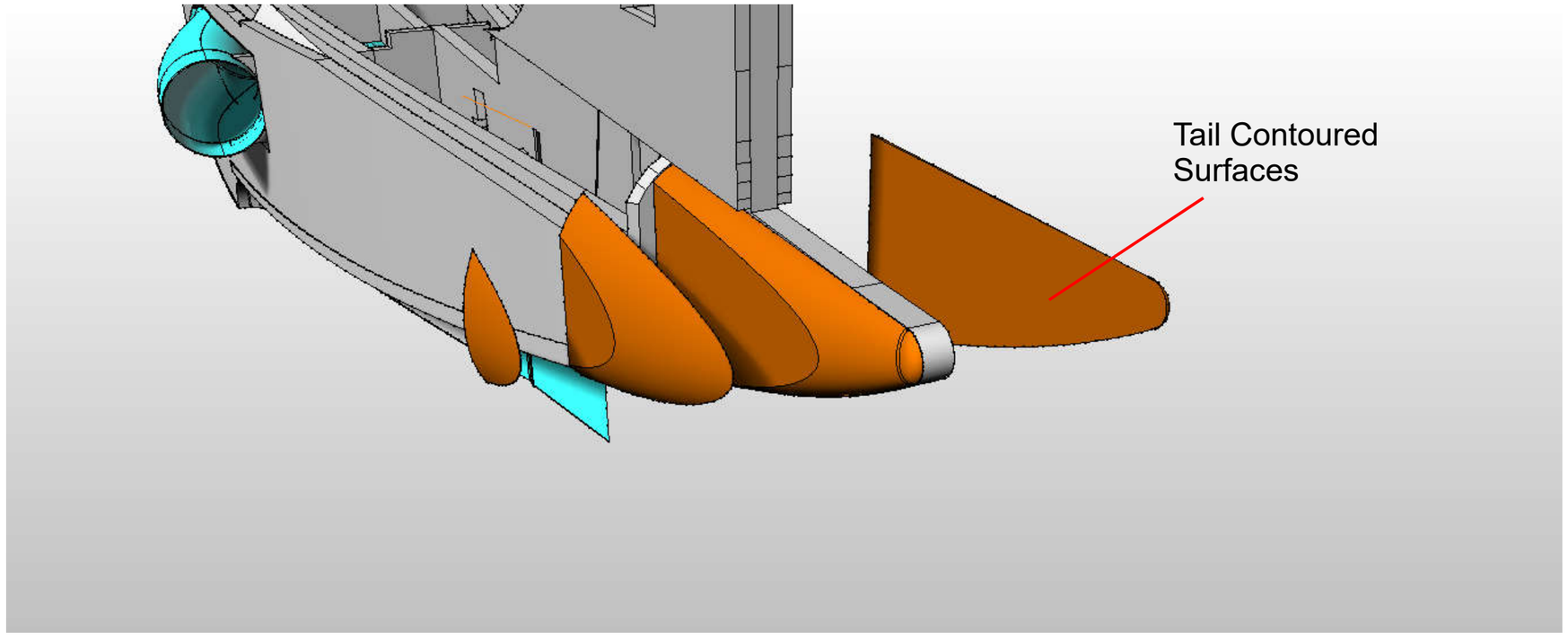

Glue the T**ail Contoured Surfaces** together then onto the assembly

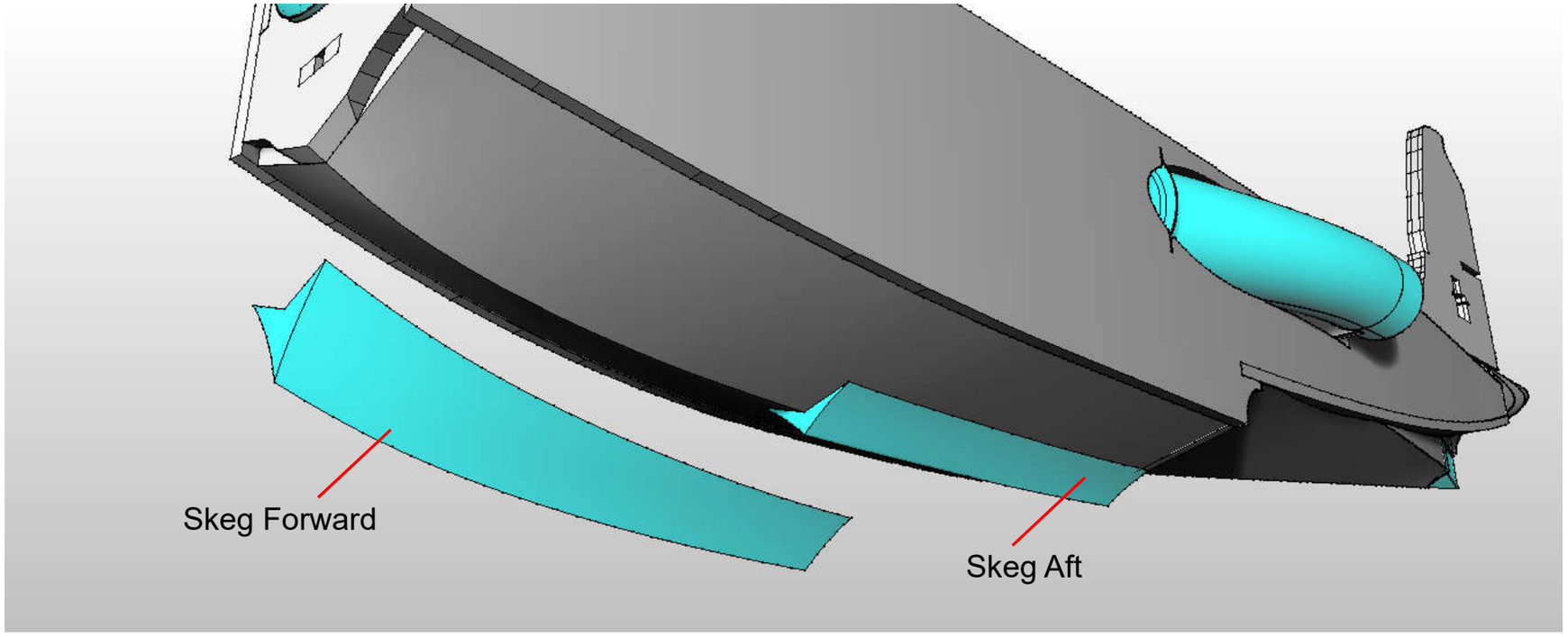

Glue the **3D printed Skegs** to the Forward Hull.

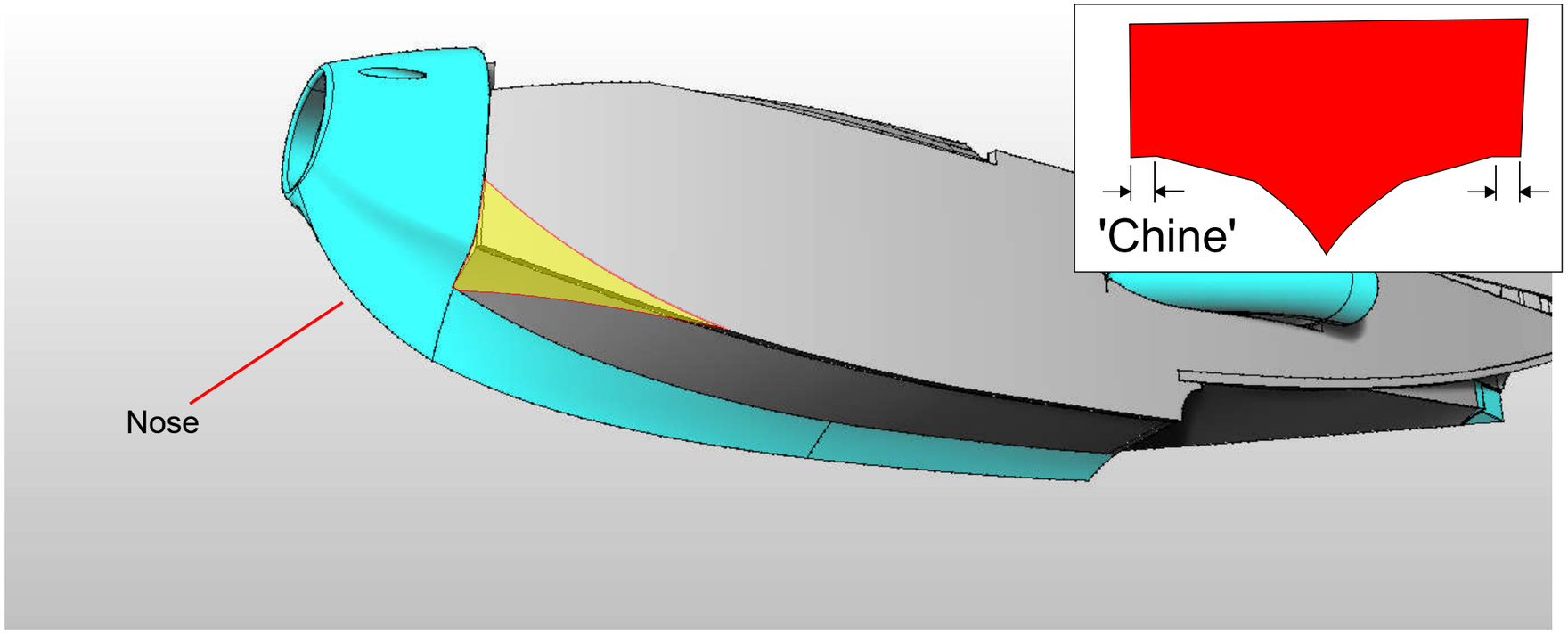

Glue the Nose to the assembly, aligning onto the inlet duct.

Shape the fuselage hull so that the shape transitions between the nosecone and the hull shape.

Keep the shape of the chine made by the fuselage sides intact from about 40% of the way aft from the nose

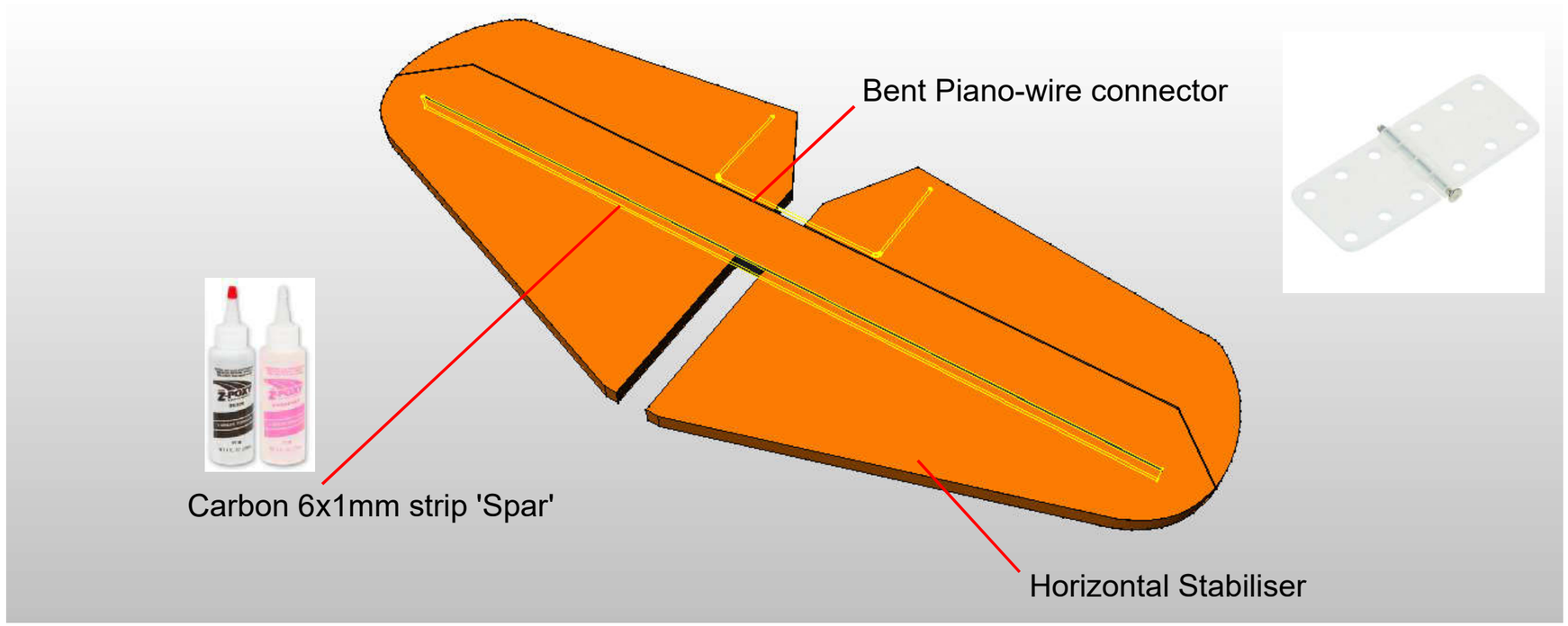

Glue the spar into the **Horizontal Stabiliser** using Epoxy.

Shape the leading edge of the elevators into a half-round shape.

Bend a U-shaped piano wire connector and insert it into the elevators.

Attach the elevators to the horizontal stabiliser using hinges like shown.

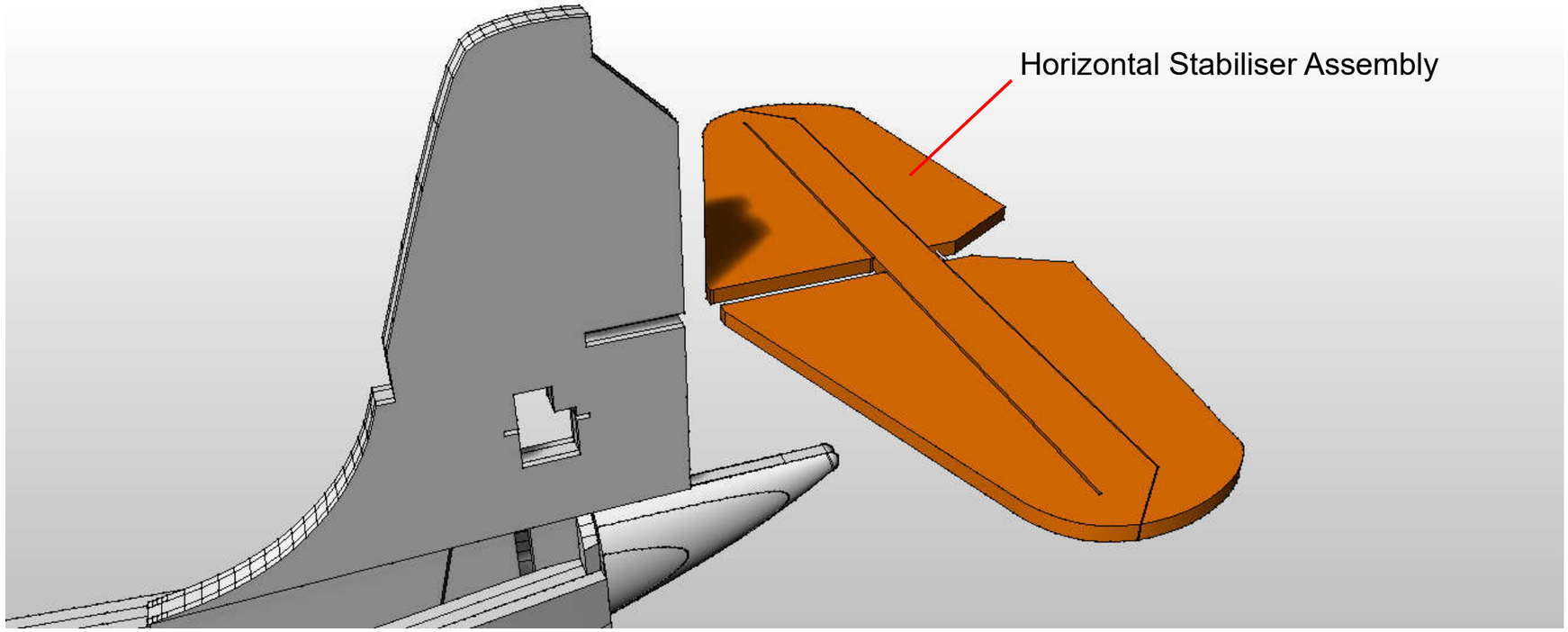

Slide the Horizontal Stabiliser assembly onto the rudder using the slots provided.

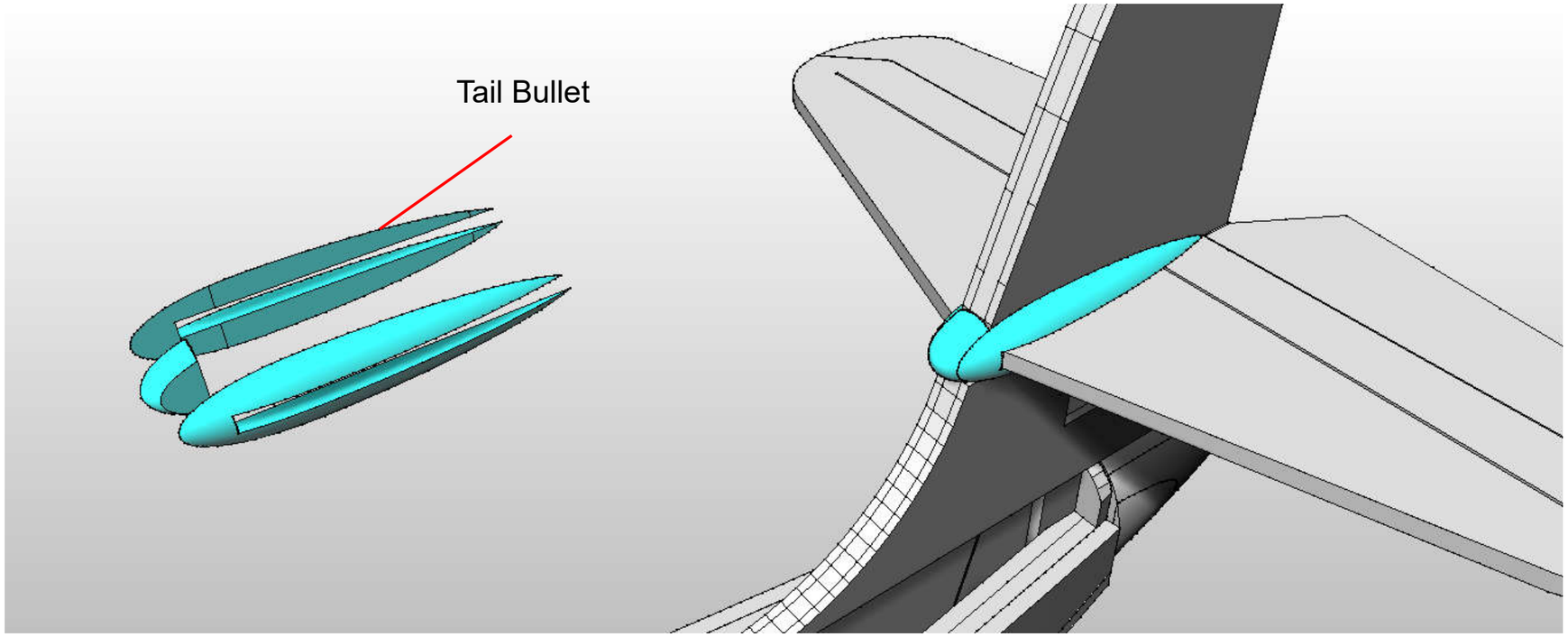

Glue the three 3D printed pieces of the **Tail Bullet** together.

Glue onto the assembly.

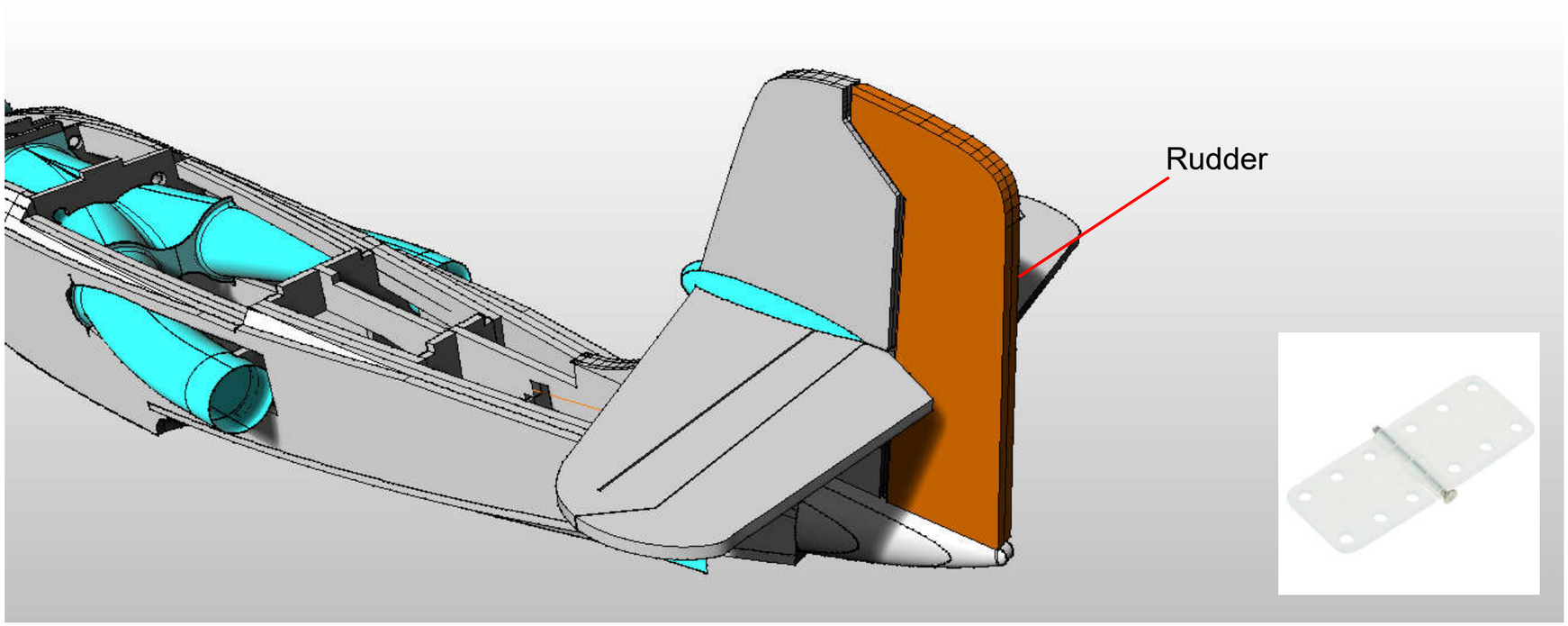

Glue the two pieces of the **Rudder** together.

Chamfer the leading edge of the Rudder so that it will swing up to 30 degrees each way, then fit it on to the airframe using hinges.

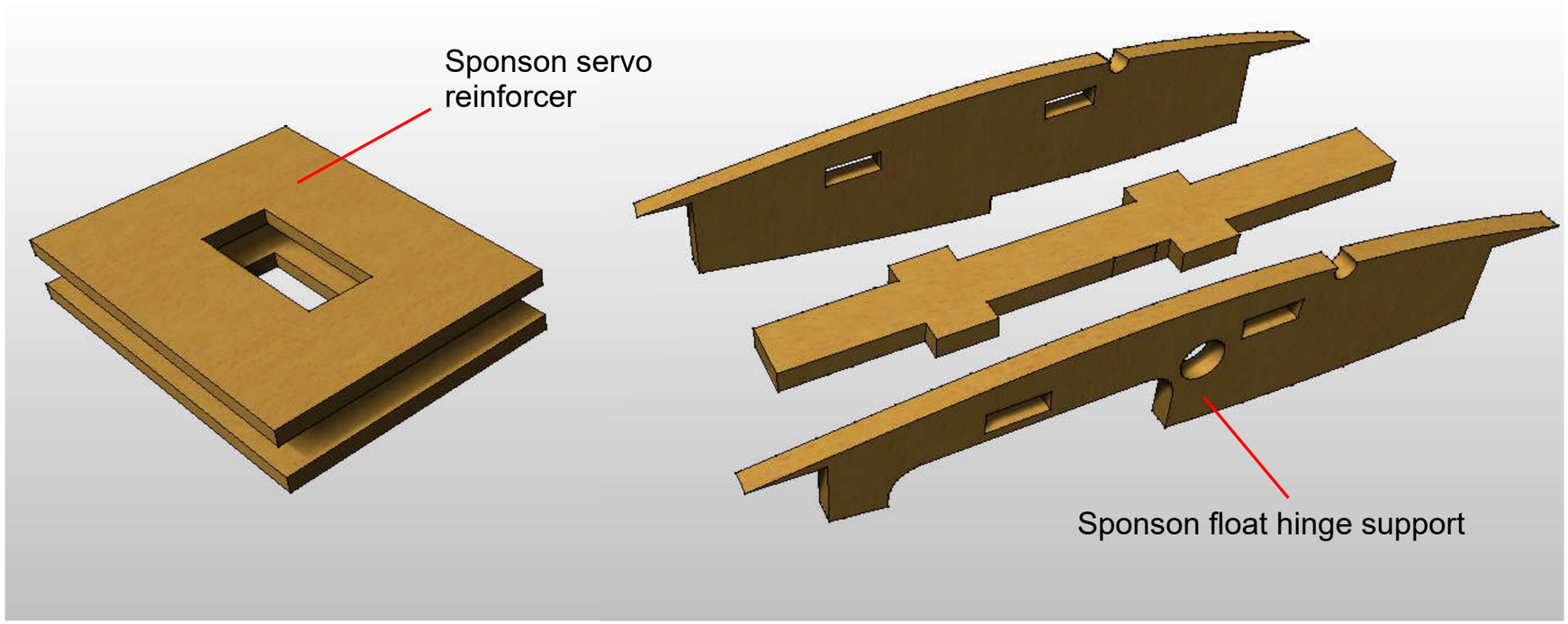

Glue together the 3mm lite-ply parts, the **Servo Reinforcer** and the **Sponson Float Hinge Support** (mirrored pair)

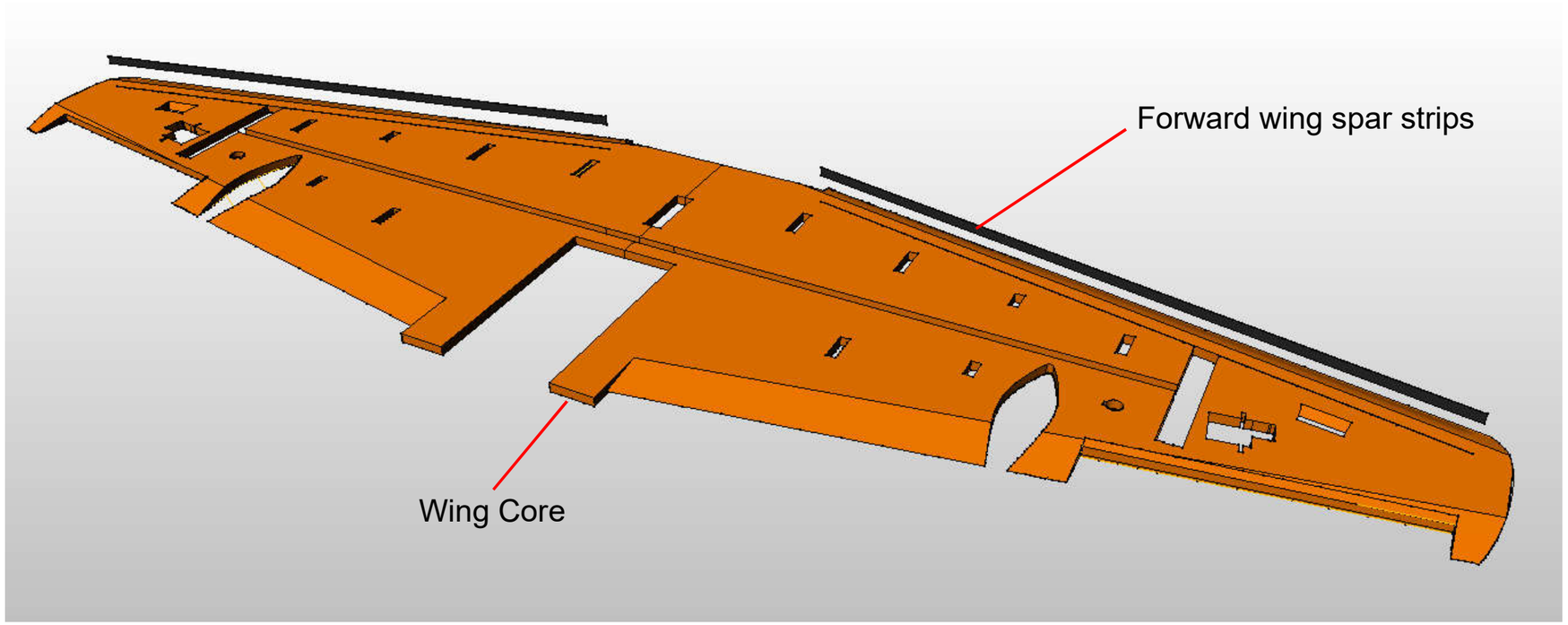

Glue the two 6x1mm carbon forward wing spar strips into the **Wing Core.**

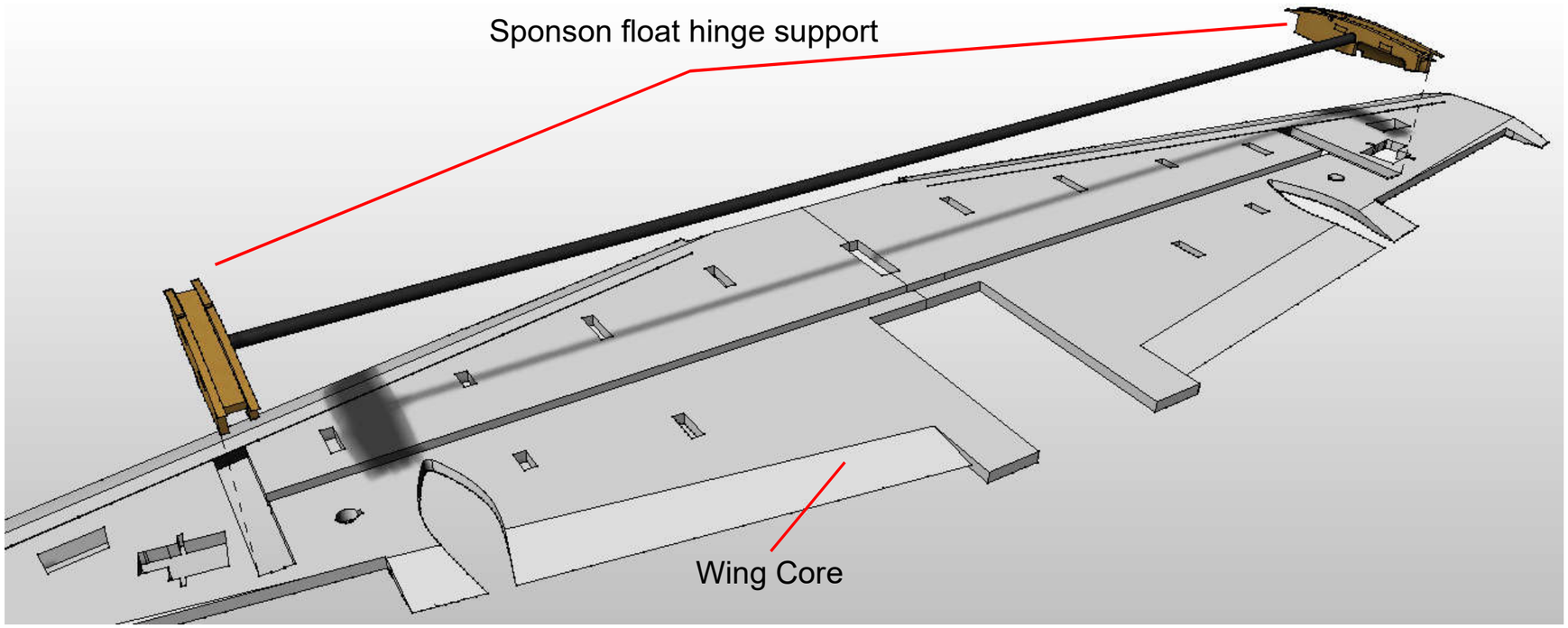

Cut the wing spar to the correct length. Using epoxy, glue the spar to the liteply **Sponson Float Hinge Support** assemblies, then into the slots in the **Wing Core**.

Use masking tape top and bottom to contain the epoxy

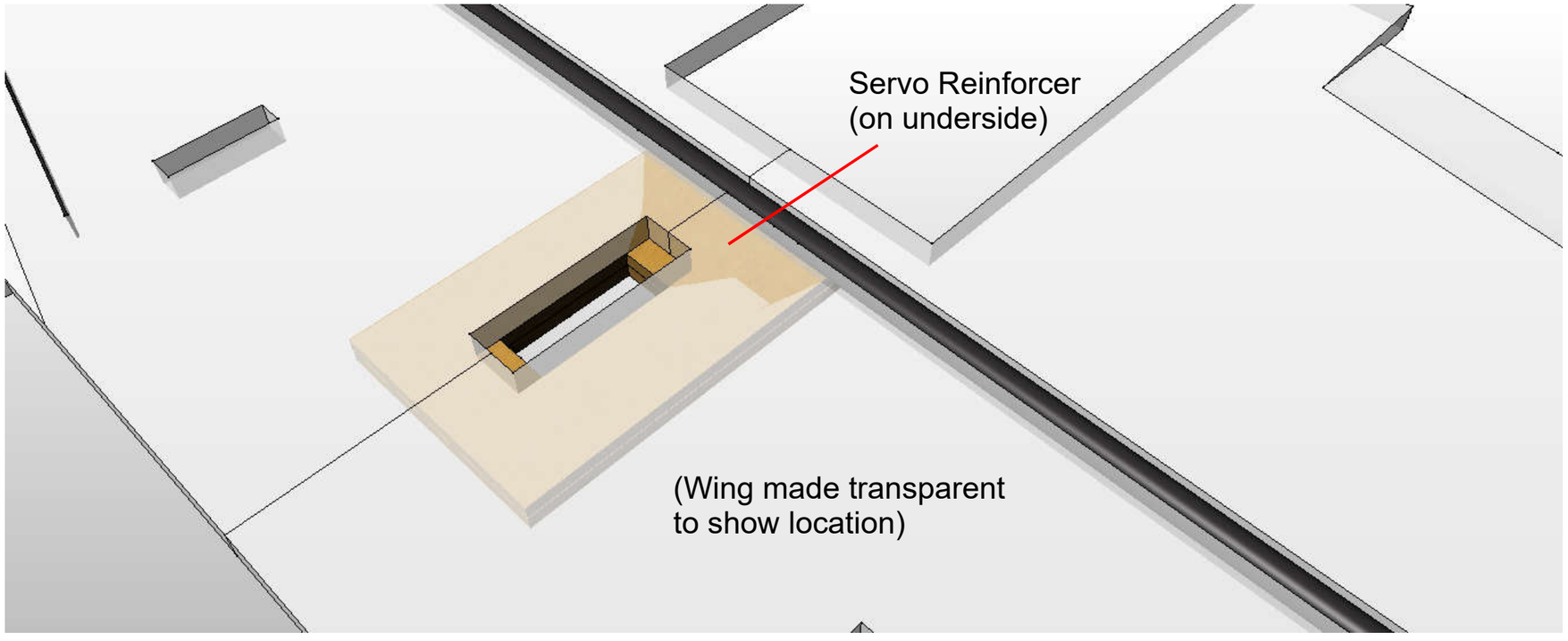

Glue the liteply **Servo Reinforcer** pieces to the underside of the wing core so that it is centrally spaced within the servo slot (creating mounting points).

Also check that the trailing edge is overhanging the wing spar.

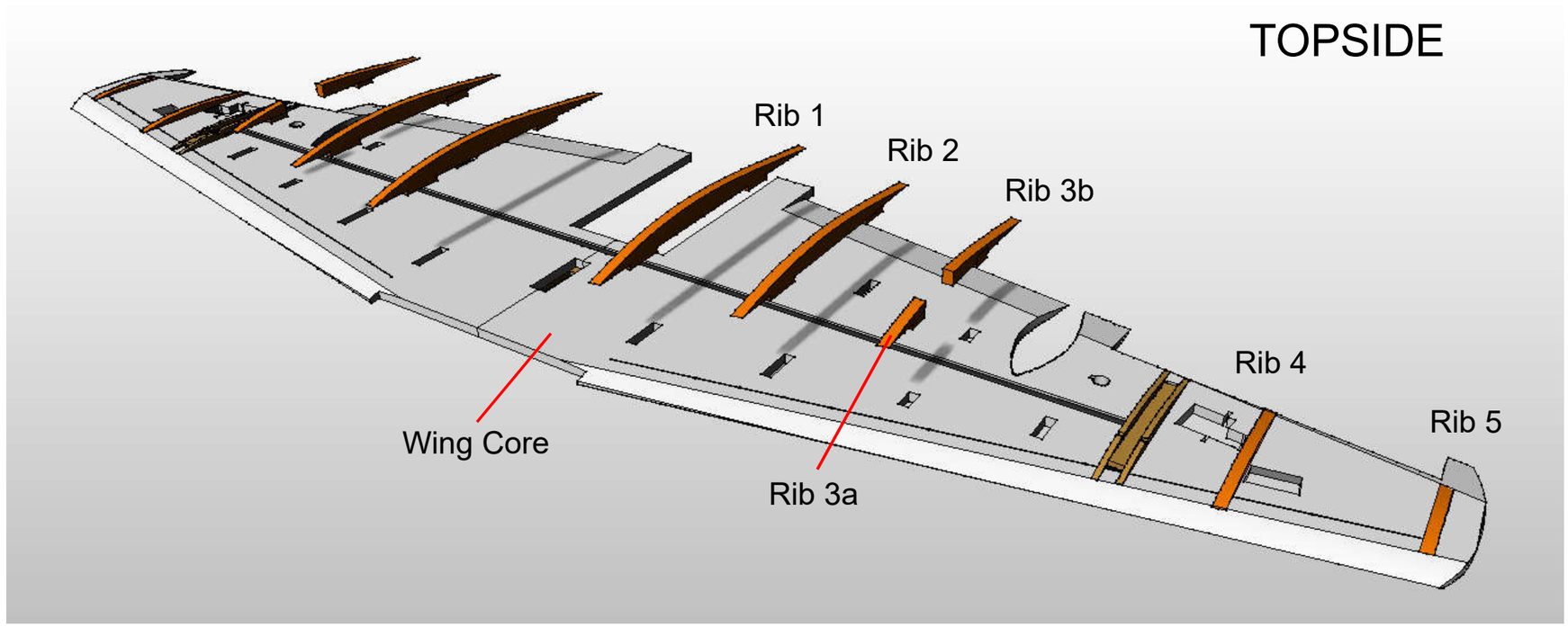

Glue the **Upper wing ribs** into the slots. For those without slots, use the markings on the plans to position them.

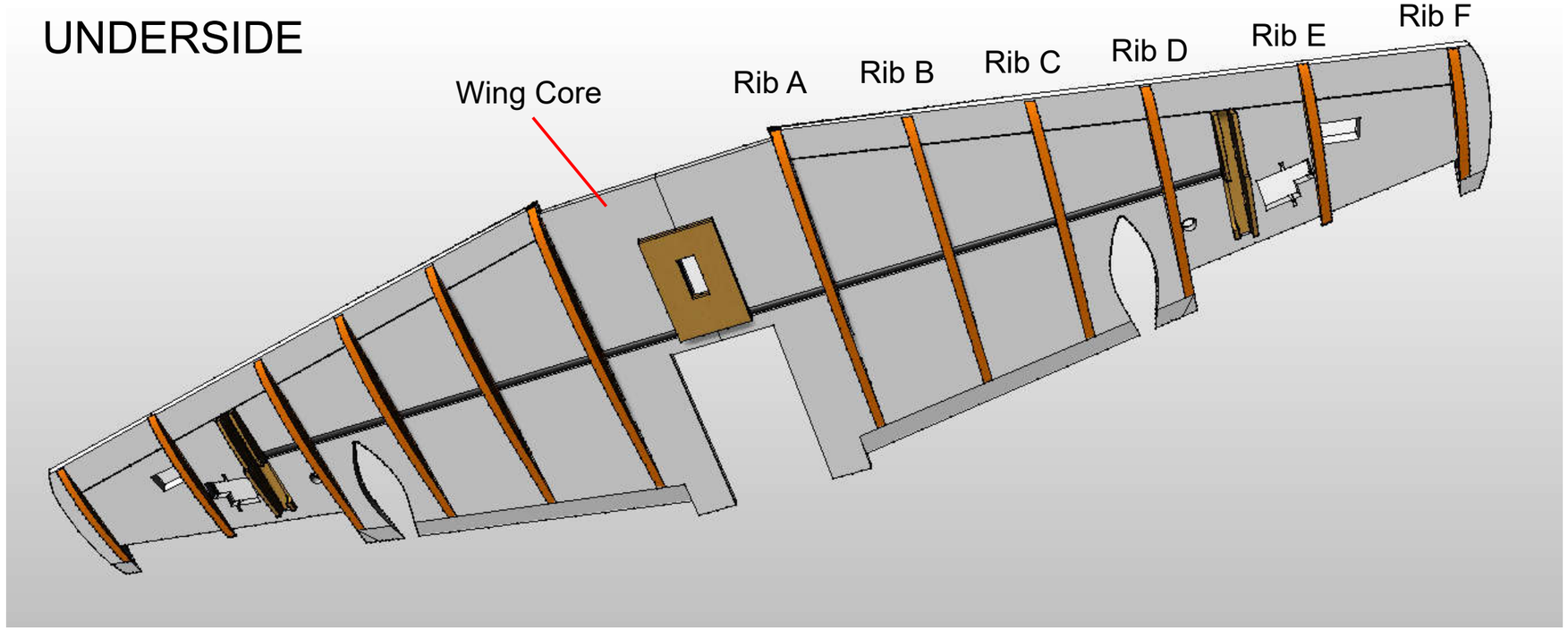

Glue the **Lower wing ribs** in the same way as the Upper ribs.

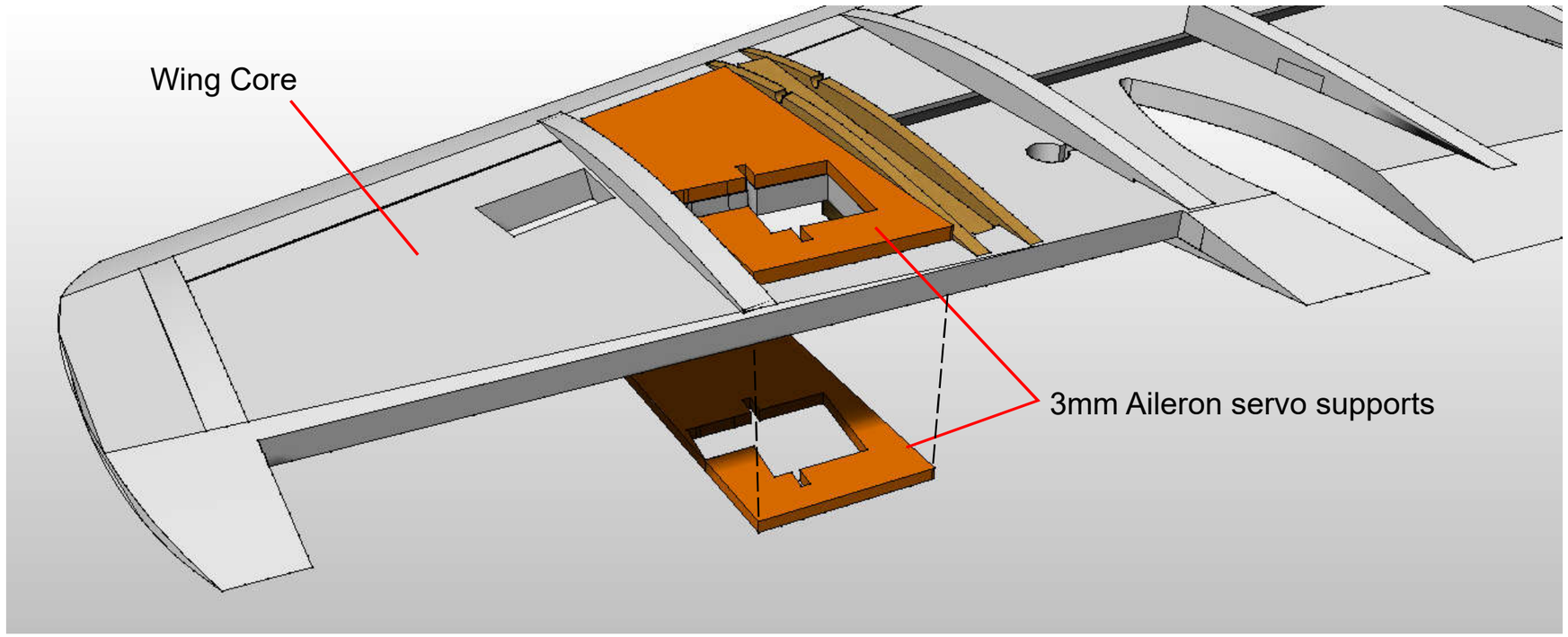

Glue the 3mm foam **Aileron Servo Supports** in place. (top and bottom - both sides)

Sand the trailing edge of the top servo support to match the neighbouring parts

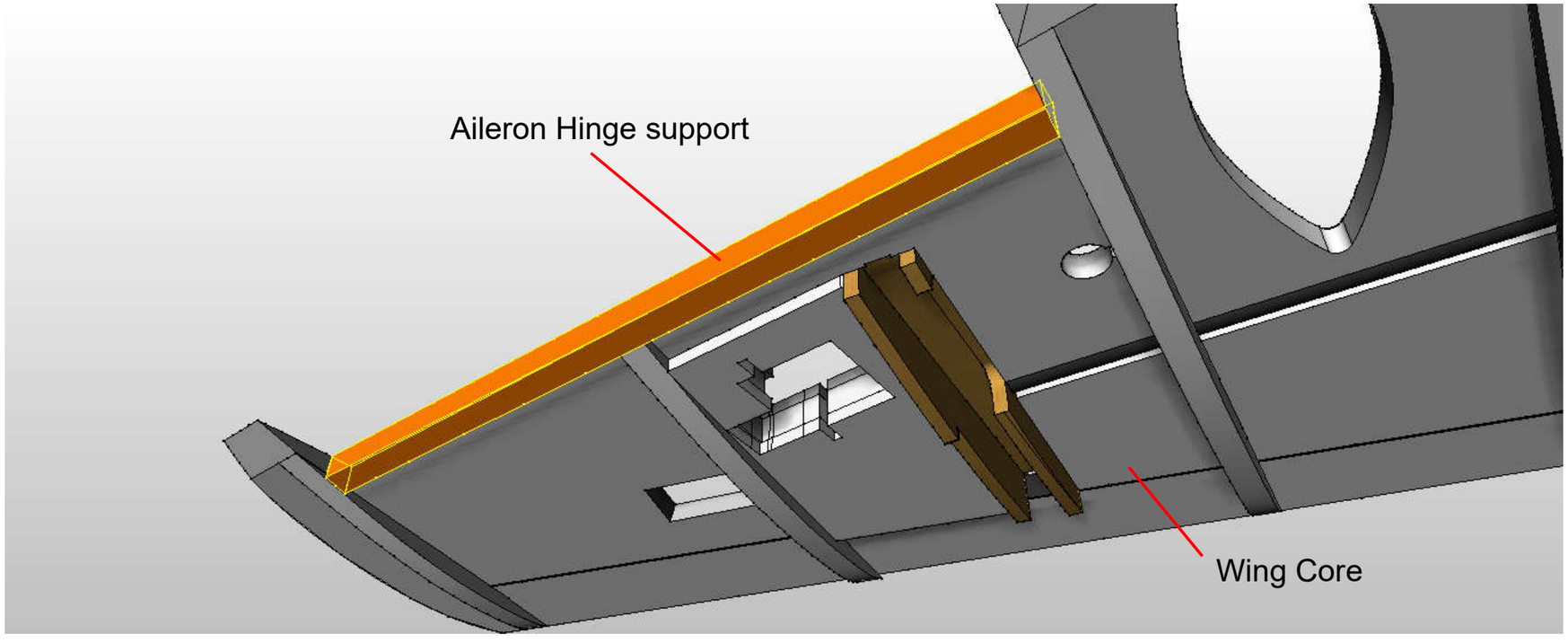

Glue the 3mm foam **Aileron Hinge Supports** in place. (they should be sticking out about 2mm below the wing core)

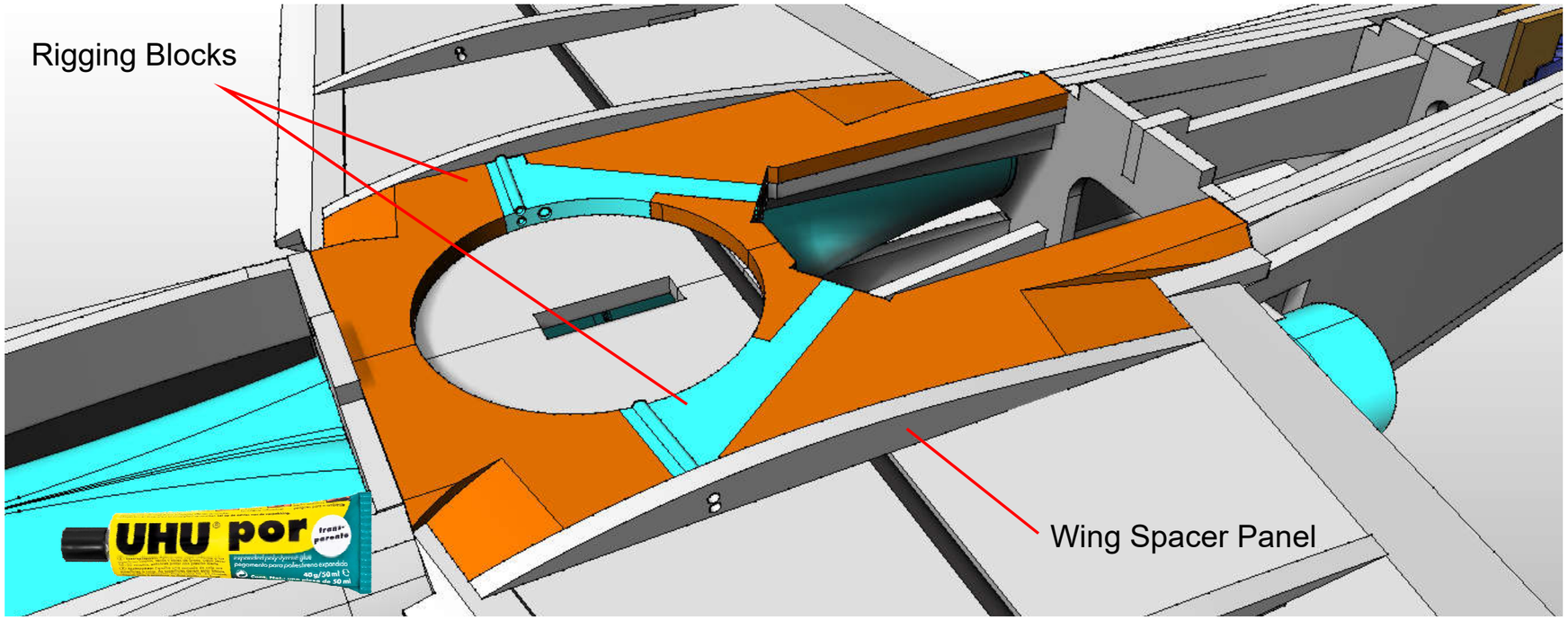

Glue the **Wing Spacer panel** to the assembly, along with the 3d printed **inner rigging blocks.**

Glue the Aileron servos into the slots using hot melt glue, then run the servo wires and extension wires on the route indicated. Set the wires into the ribs using a circular needle file.

Screw the Sponson servo into the lite ply as shown.

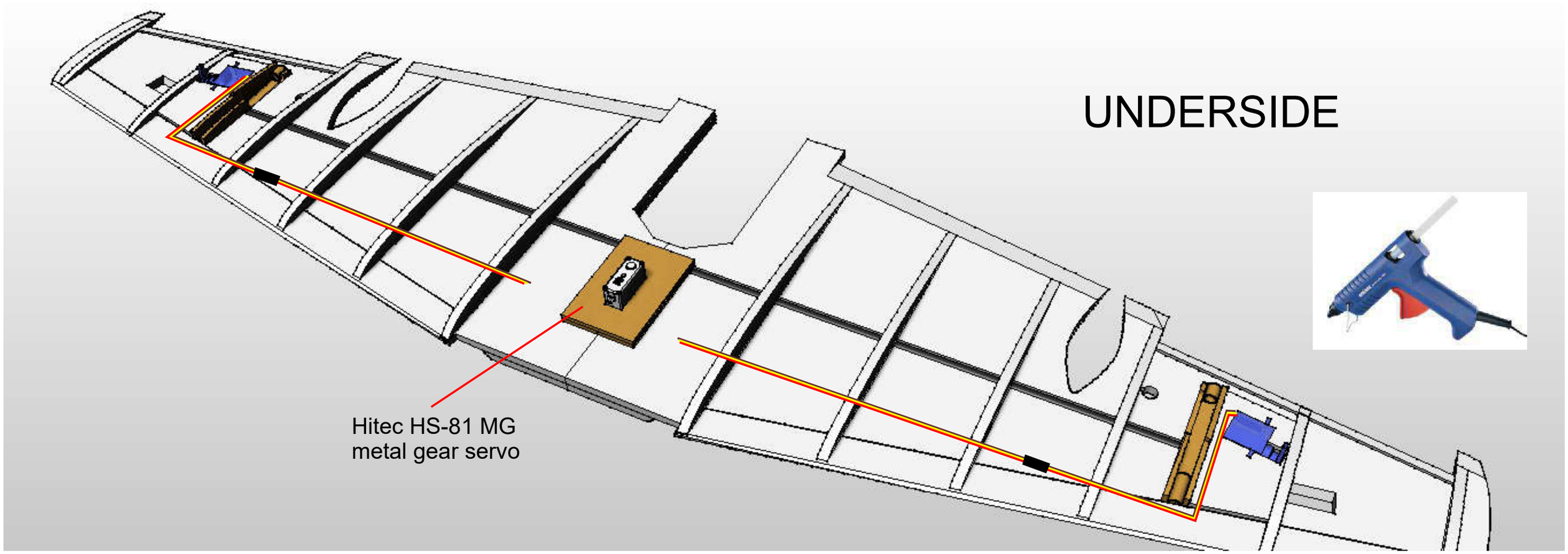

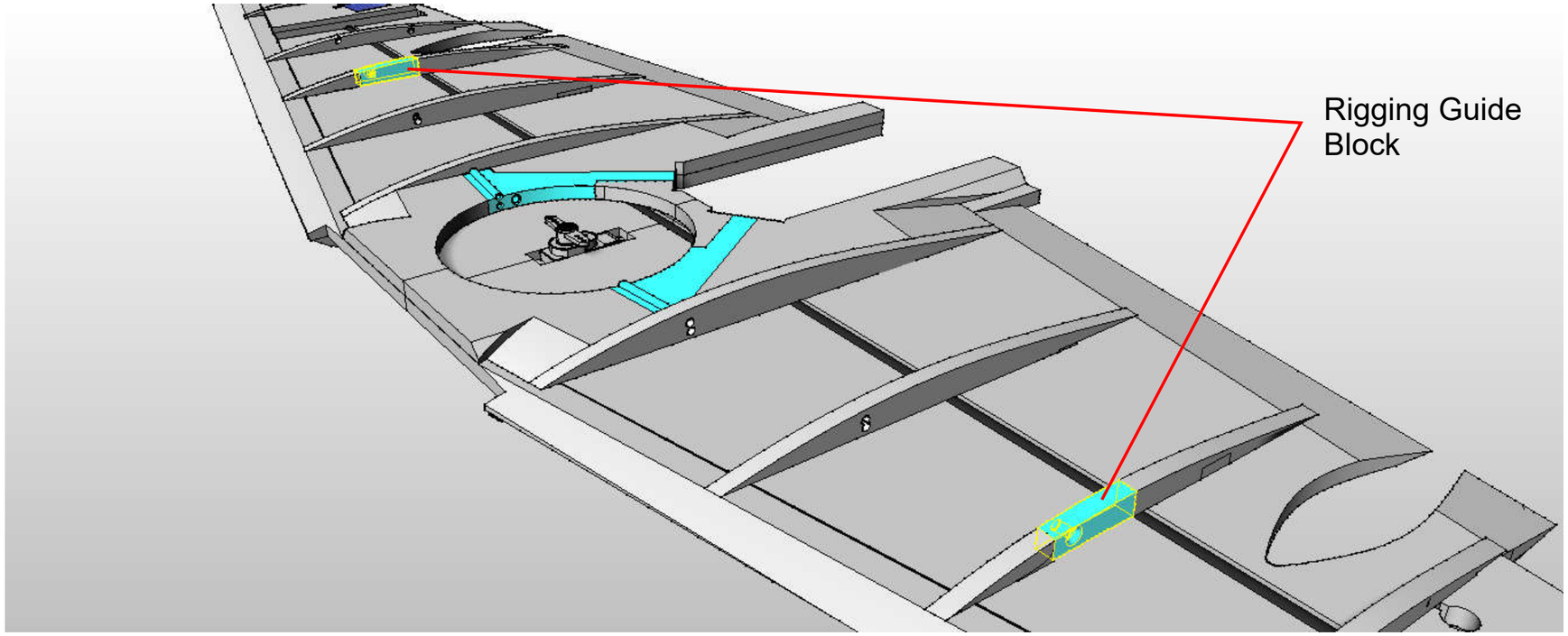

Glue the mirrored pair of **Rigging Guide Blocks** into the wing as shown with the inlet radius on the outer sides.

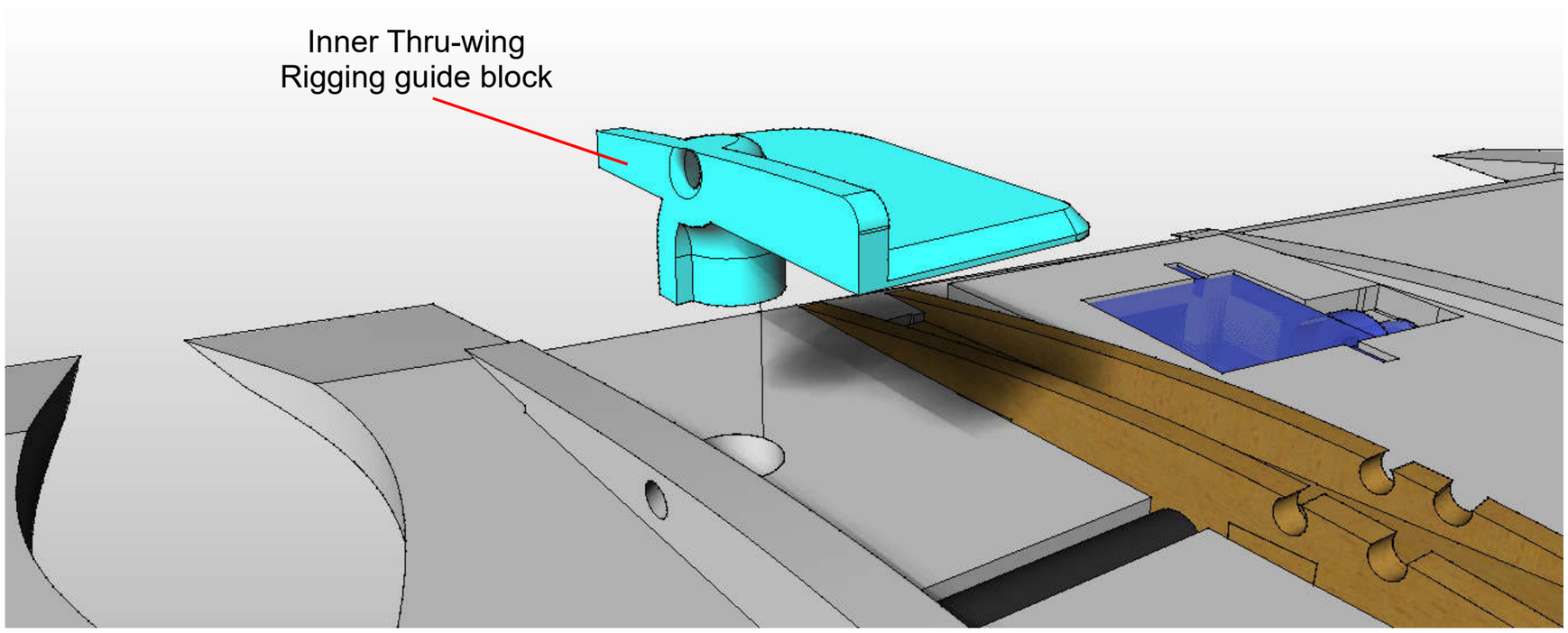

Glue the **Inner Thru-Wing Rigging Guide block** into the Keyhole shaped hole in the wing (mirrored onto the other wing).

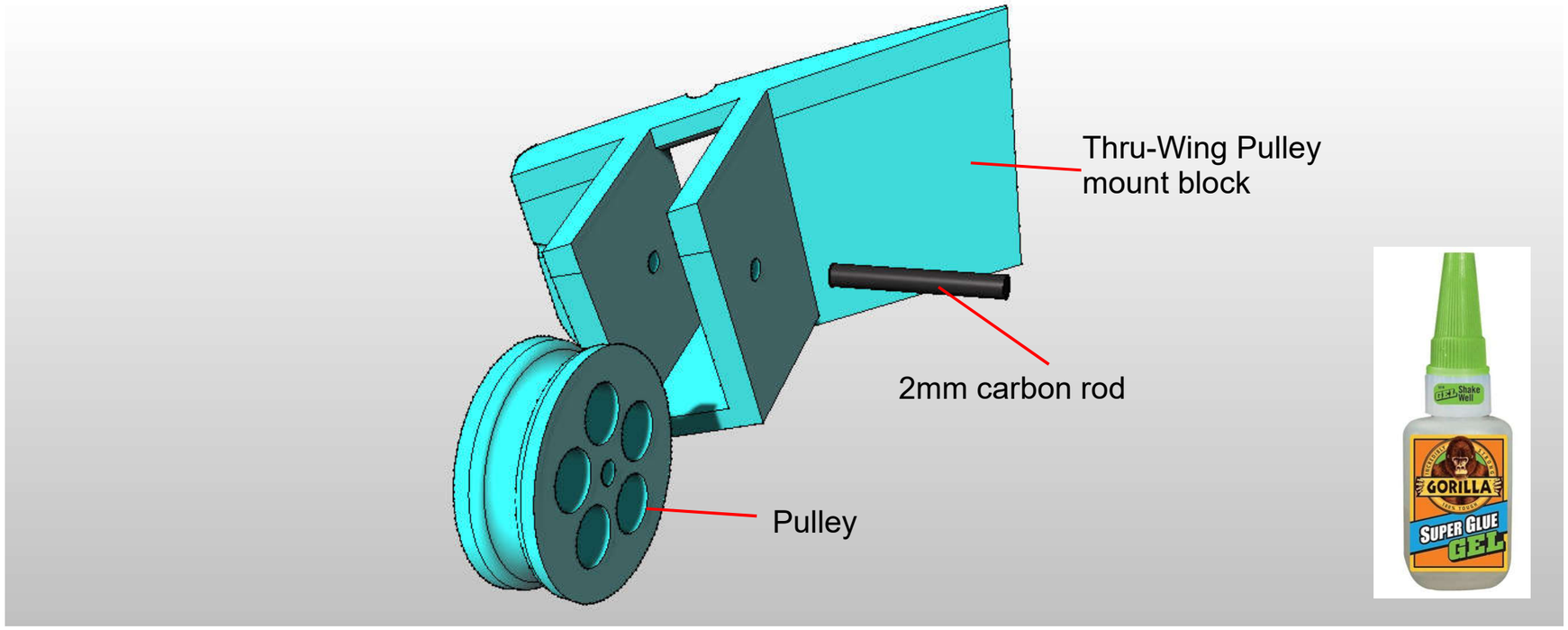

Fit the Pulley into the **Thru-Wing Pulley mount block** using a 2mm carbon rod as an axle. I chose carbon as it doesn't rust. Glue the carbon rod to the block carefully to prevent it from moving. Ensure the pulley spins free.

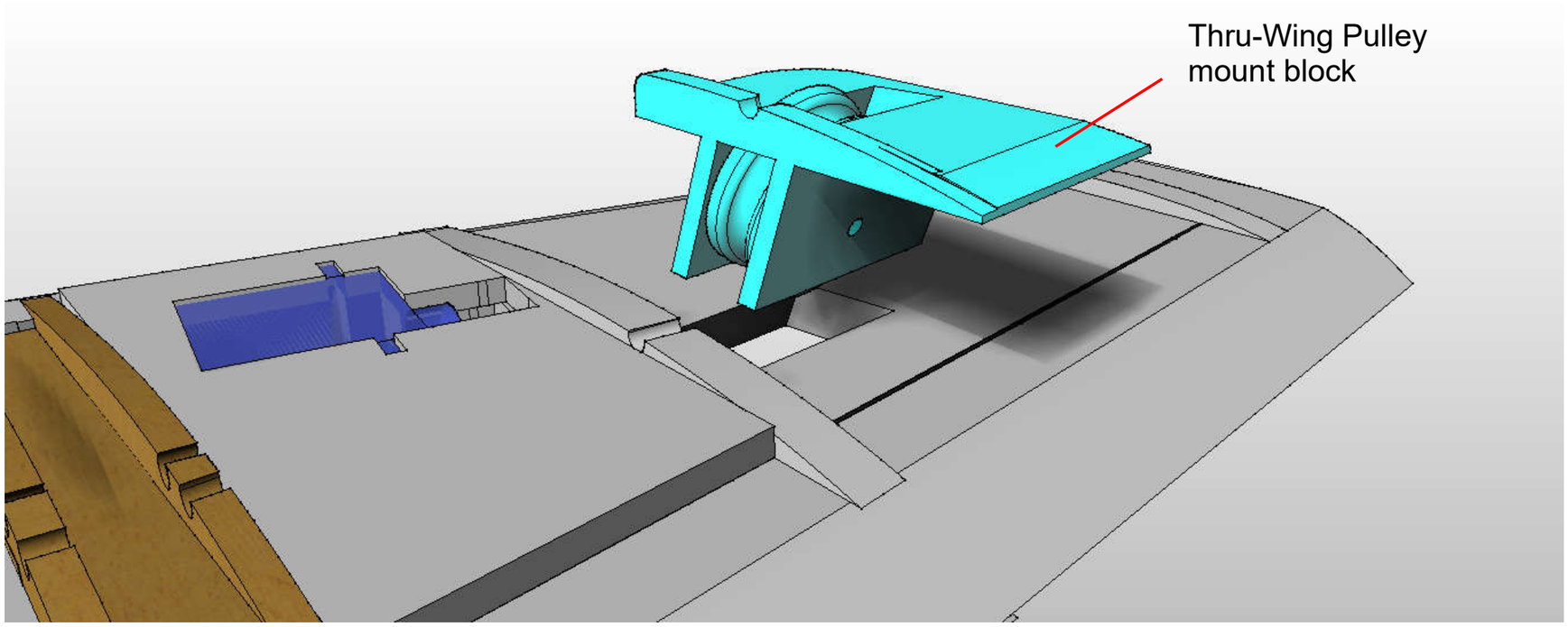

Glue the **Thru-Wing Pulley mount block** assembly into the slot in the wing.

(mirrored onto the other wing).

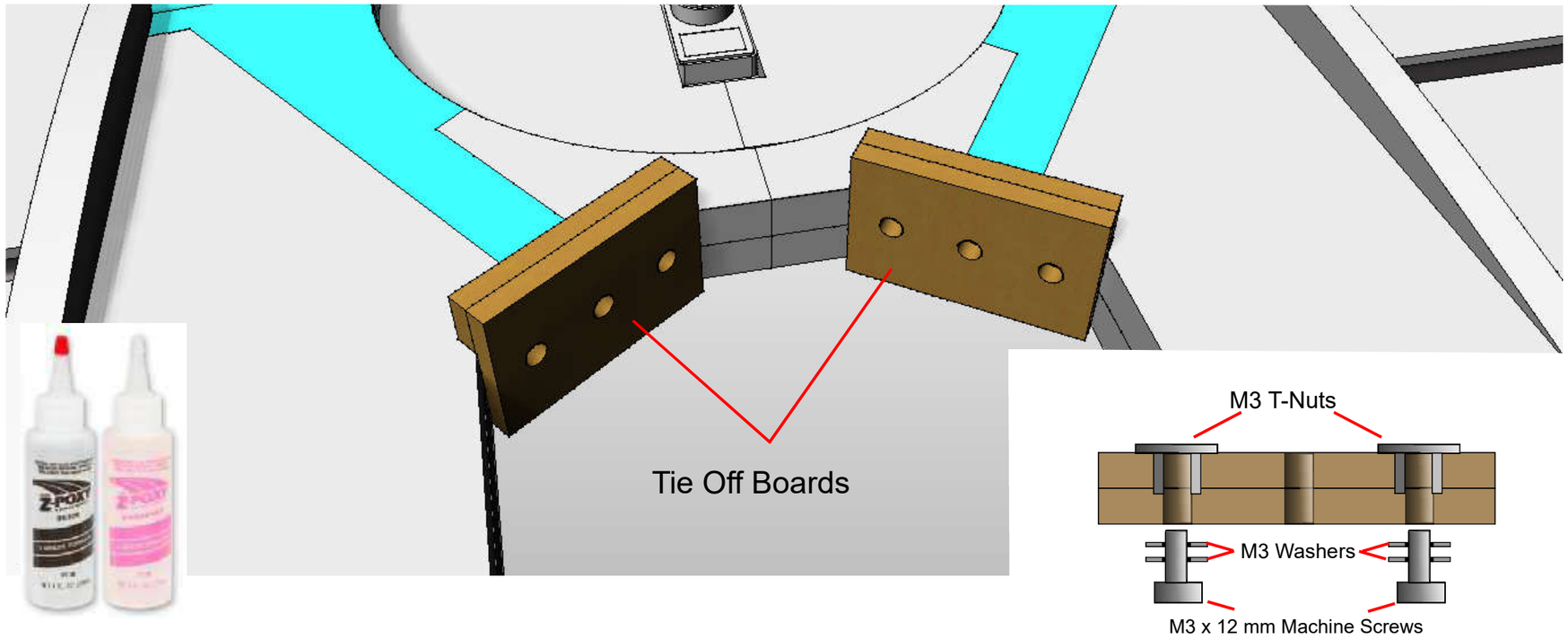

using the four pieces, create two Tie-Off boards glued together as shown using epoxy

Drill and hammer in 4 x M3 T-Nuts onto the rear of ply, carefully mask the T-Nut threaded area off using masking tape then glue both Tie-off boards to the wing assembly.

Ensure the central hole is clear for running the nylon fishing line through.

Use washers and machine screws to make a clamp, to allow you to wrap the line around the screw then tighten it up to clamp it in place.

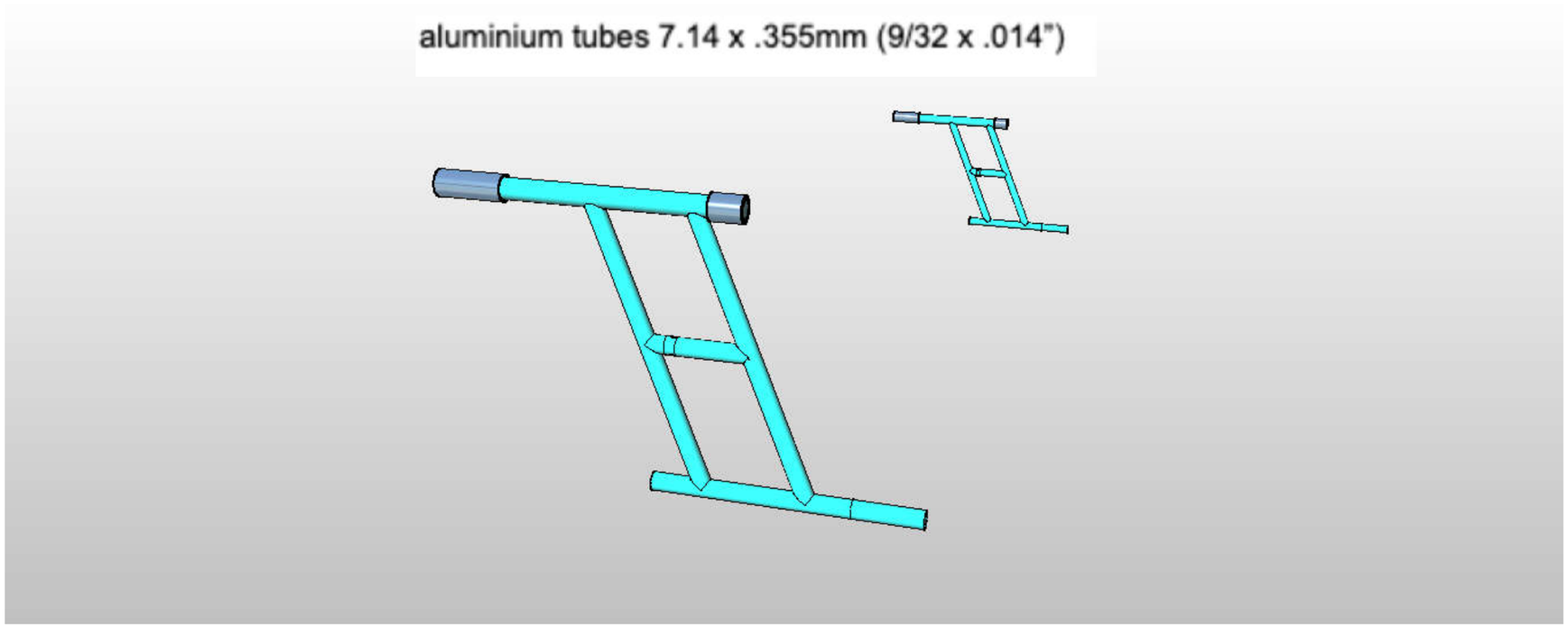

Cut and trim the aluminium tube to fit onto the top ends of the 3d printed **Sponson legs**.

(10mm and 20mm)

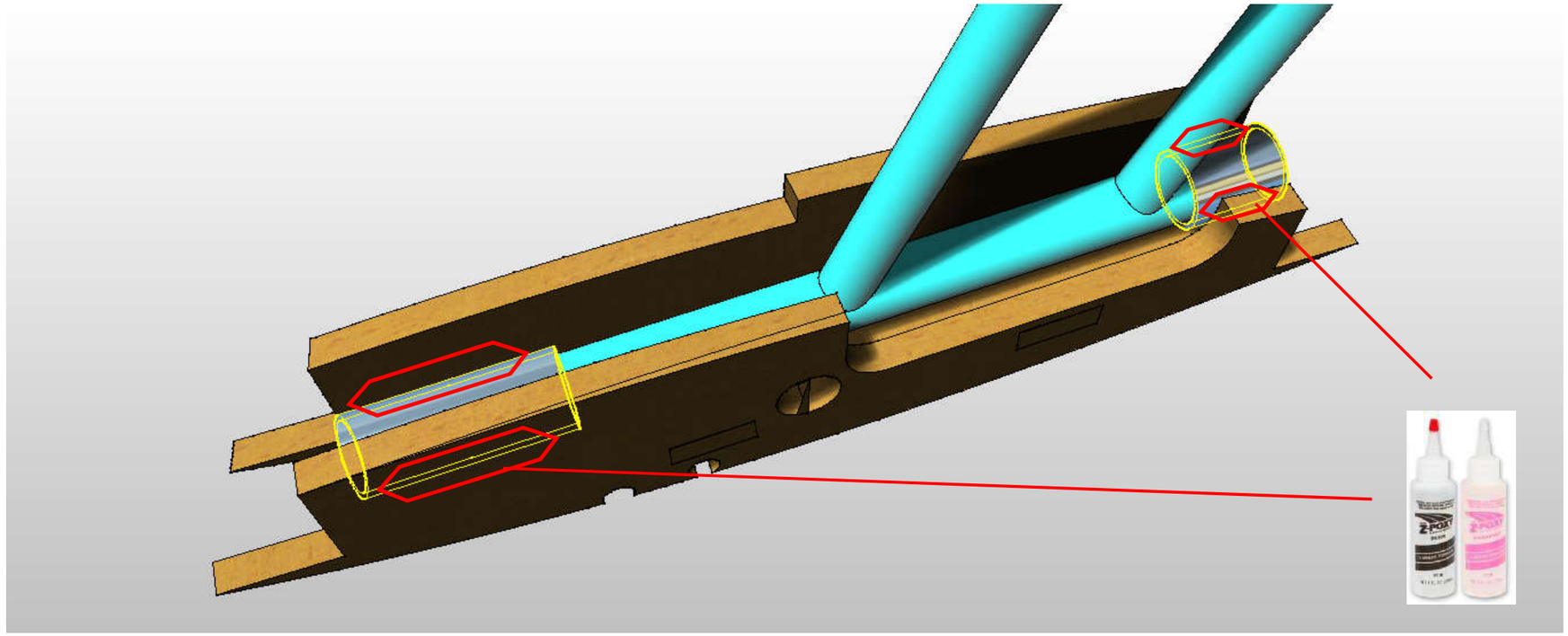

Using Epoxy mixed with Microballoons (mix to a non-runny consistency) carefully glue the Aluminium tubes into the lite-ply without impeding the movement of the Sponson arm.

Do this to both sides.

Image shown removed from wing for illustration purposes.

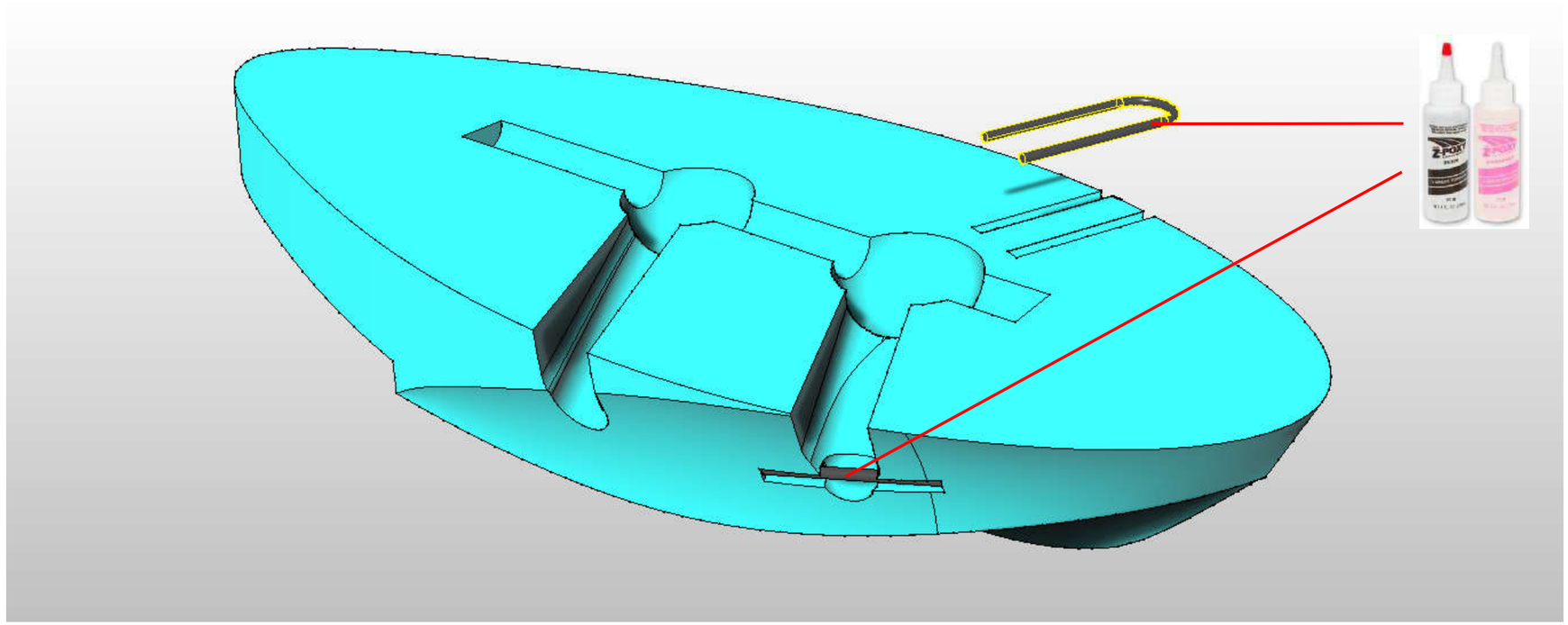

Cut and bend to shape, 1mm brass rod and glue into the lower sponson.

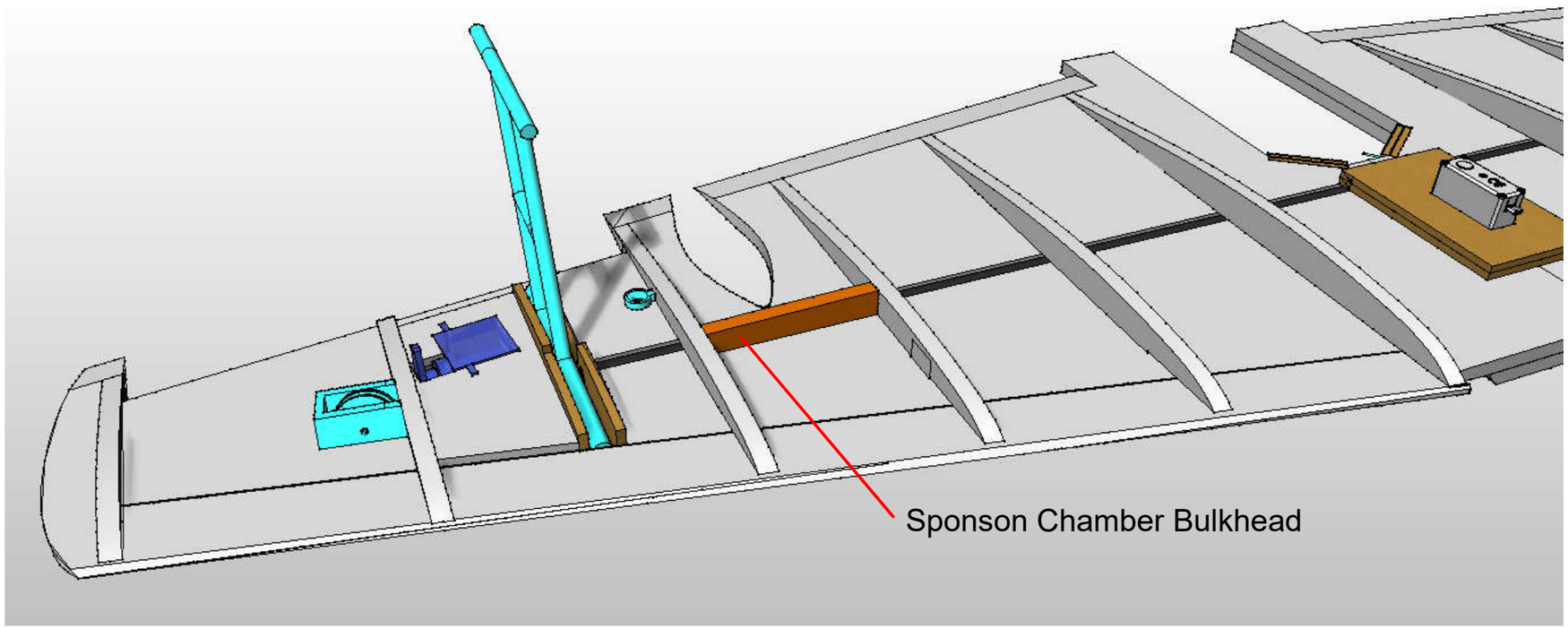

Glue the **Sponson Chamber Bulkhead** in place (both sides of wing)

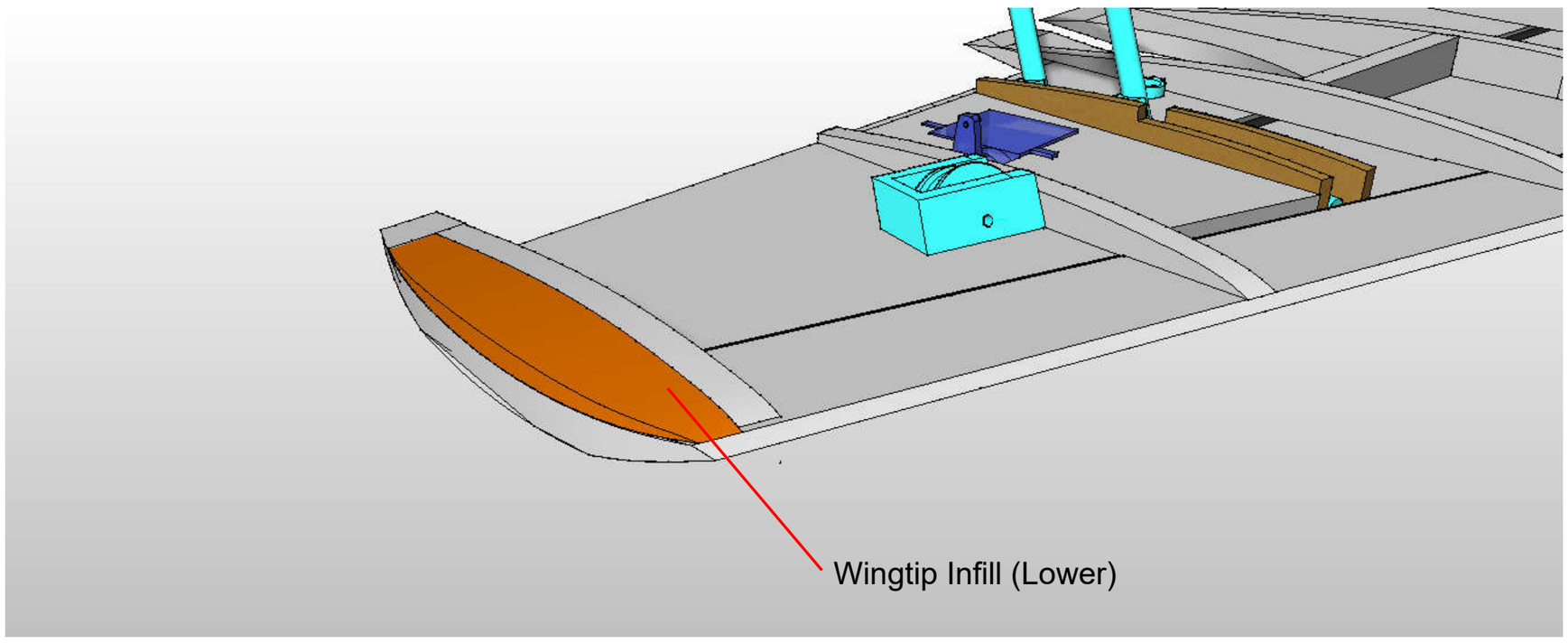

Glue the **Wingtip Infill (lower)** in place (both sides of wing)

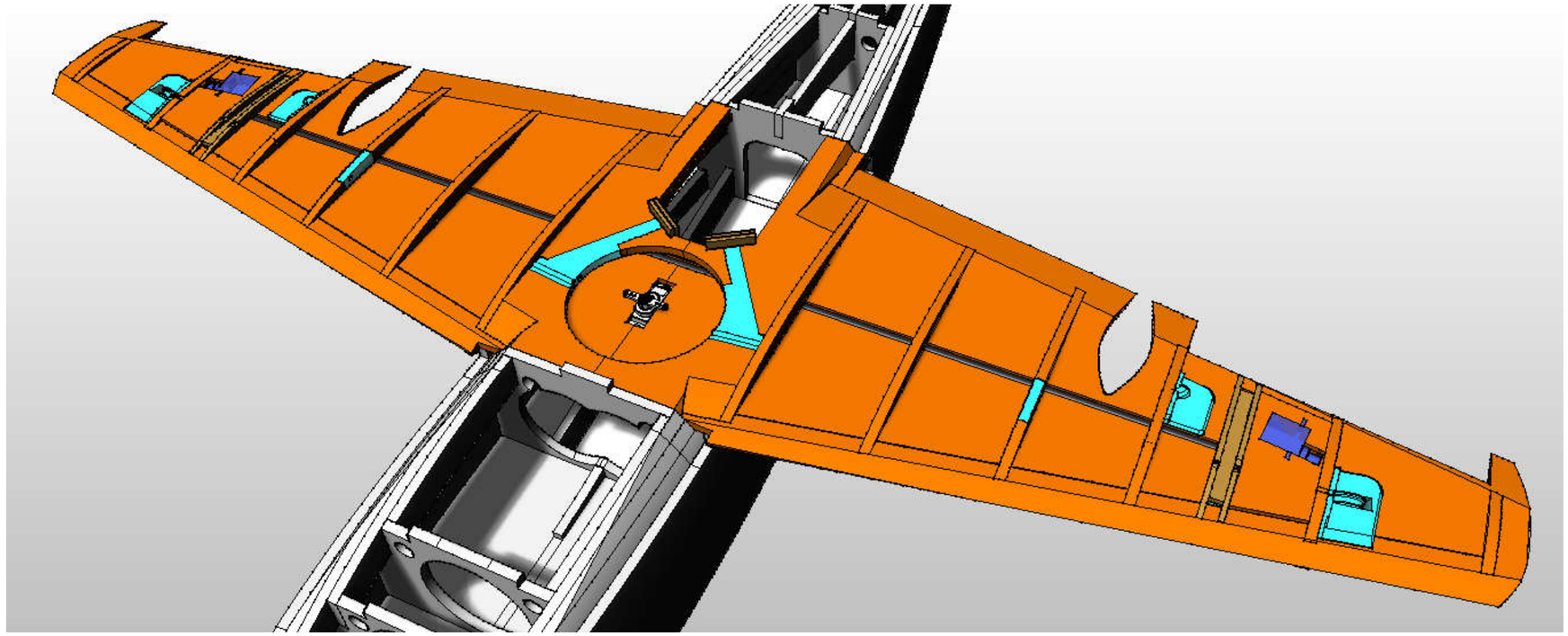

Using a sanding block, smooth the fuselage mating surfaces to get a good adhesion, then glue the wing assembly to the fuselage.

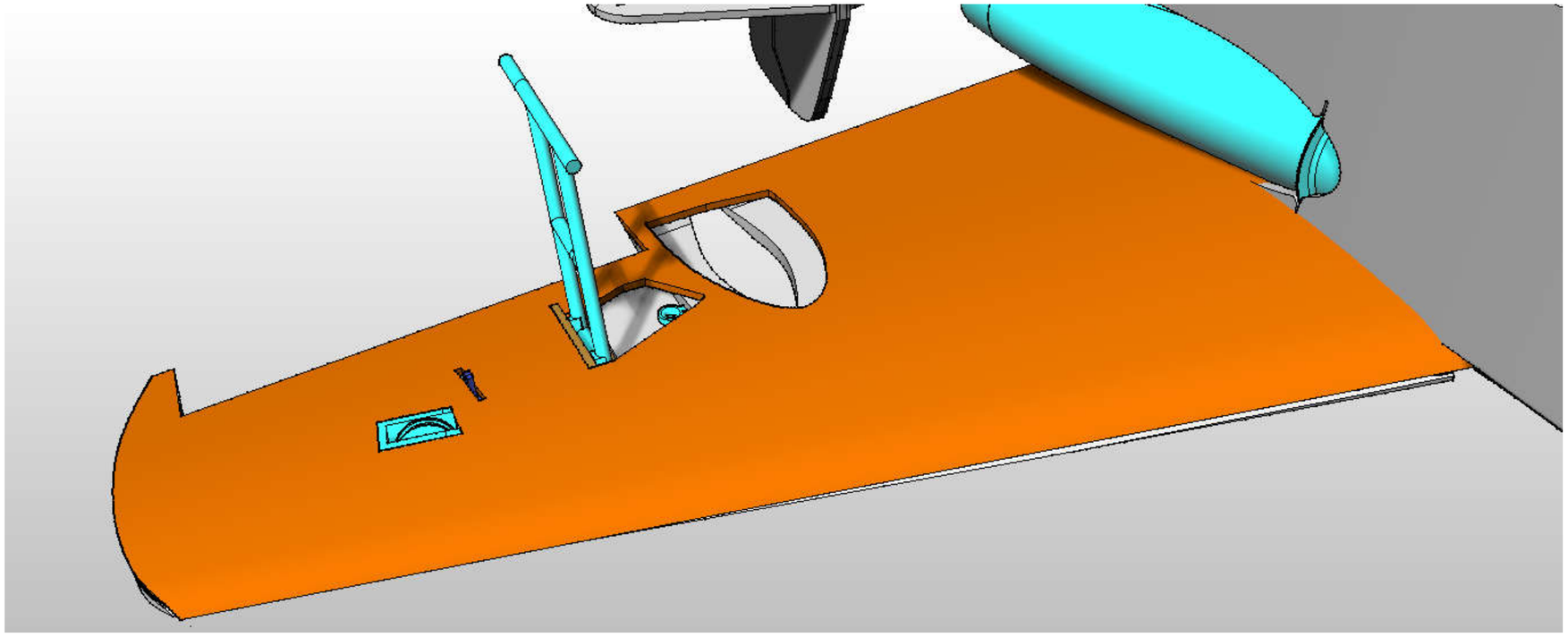

Carefully align the 3mm Wing Skin (lower) to the underside of the wing.

Cut it to shape to fit the shape of the fuselage.

Make the part overlap by 12mm aft and 3mm forward the wing core assembly

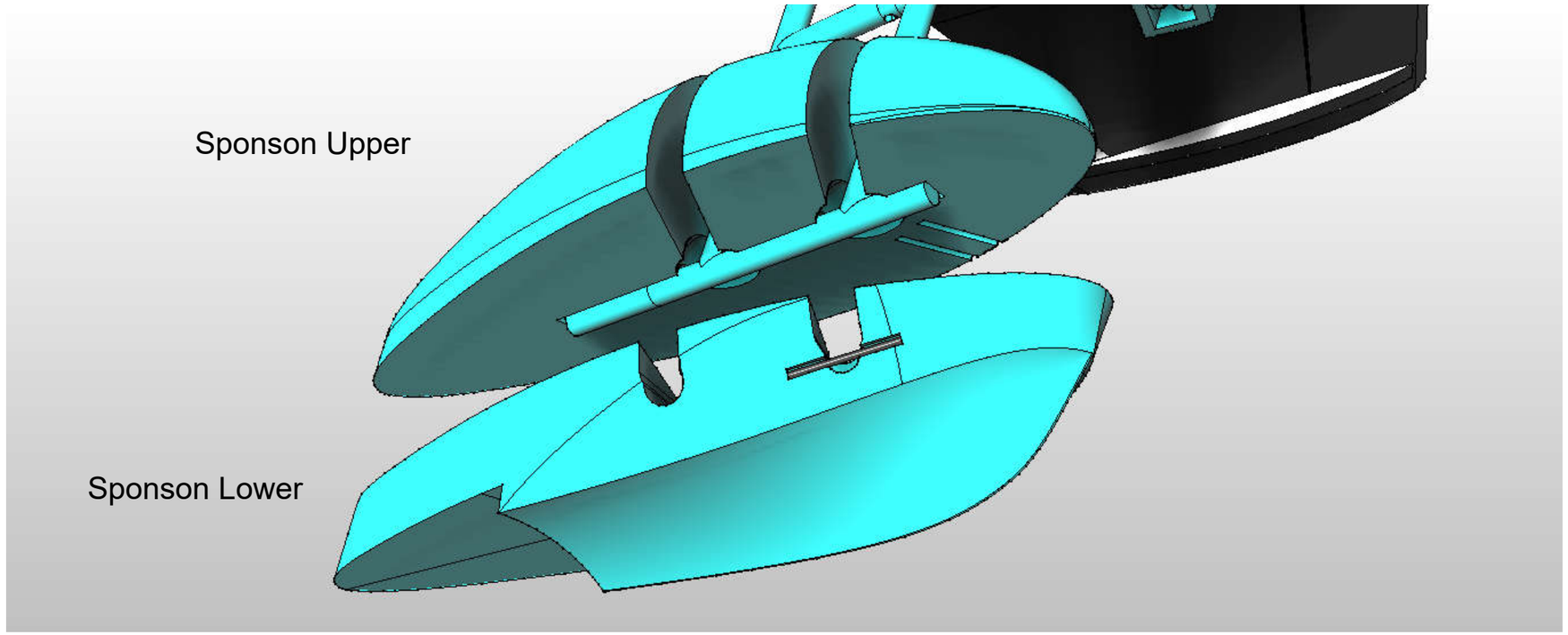

Using CA, Glue the top and bottom Sponson parts together around the Sponson legs. ensuring they rotate freely.

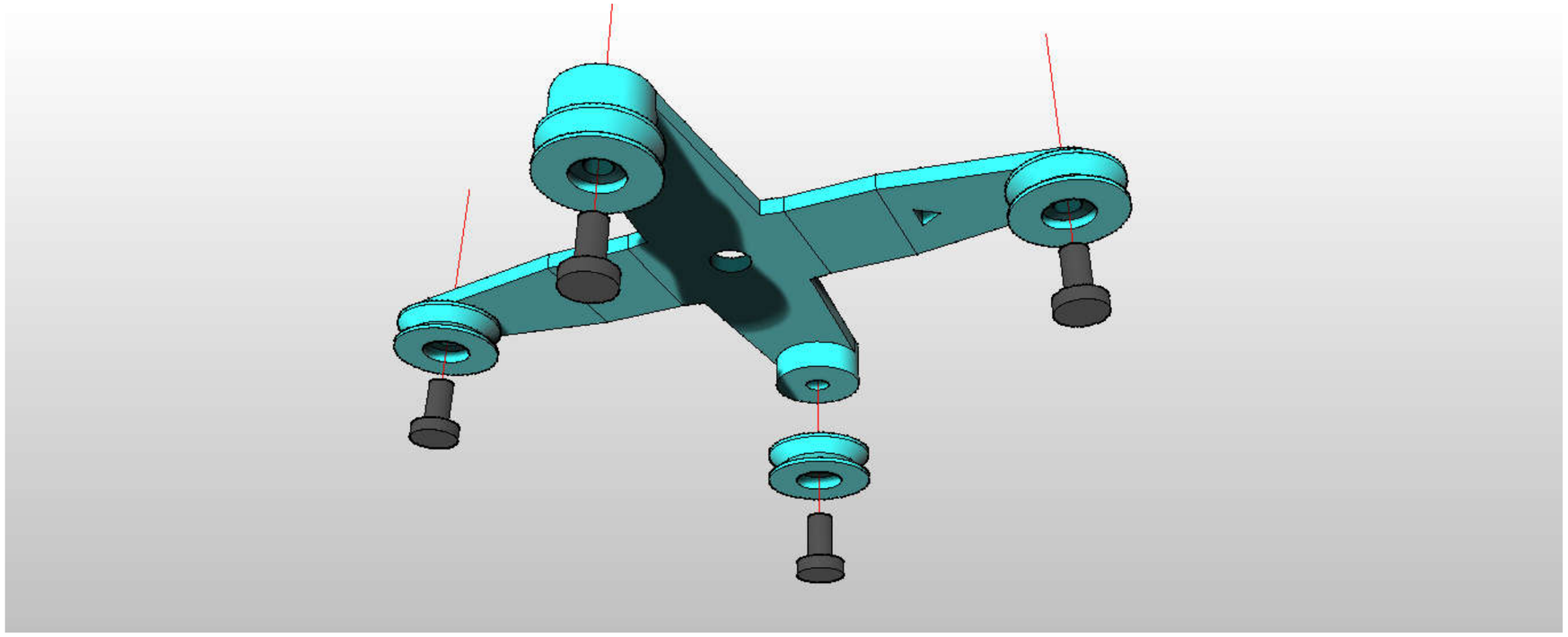

Using 3mm machine screws screw through the pulleys and bite into the **Sponson control horn.**

FLOATS DOWN

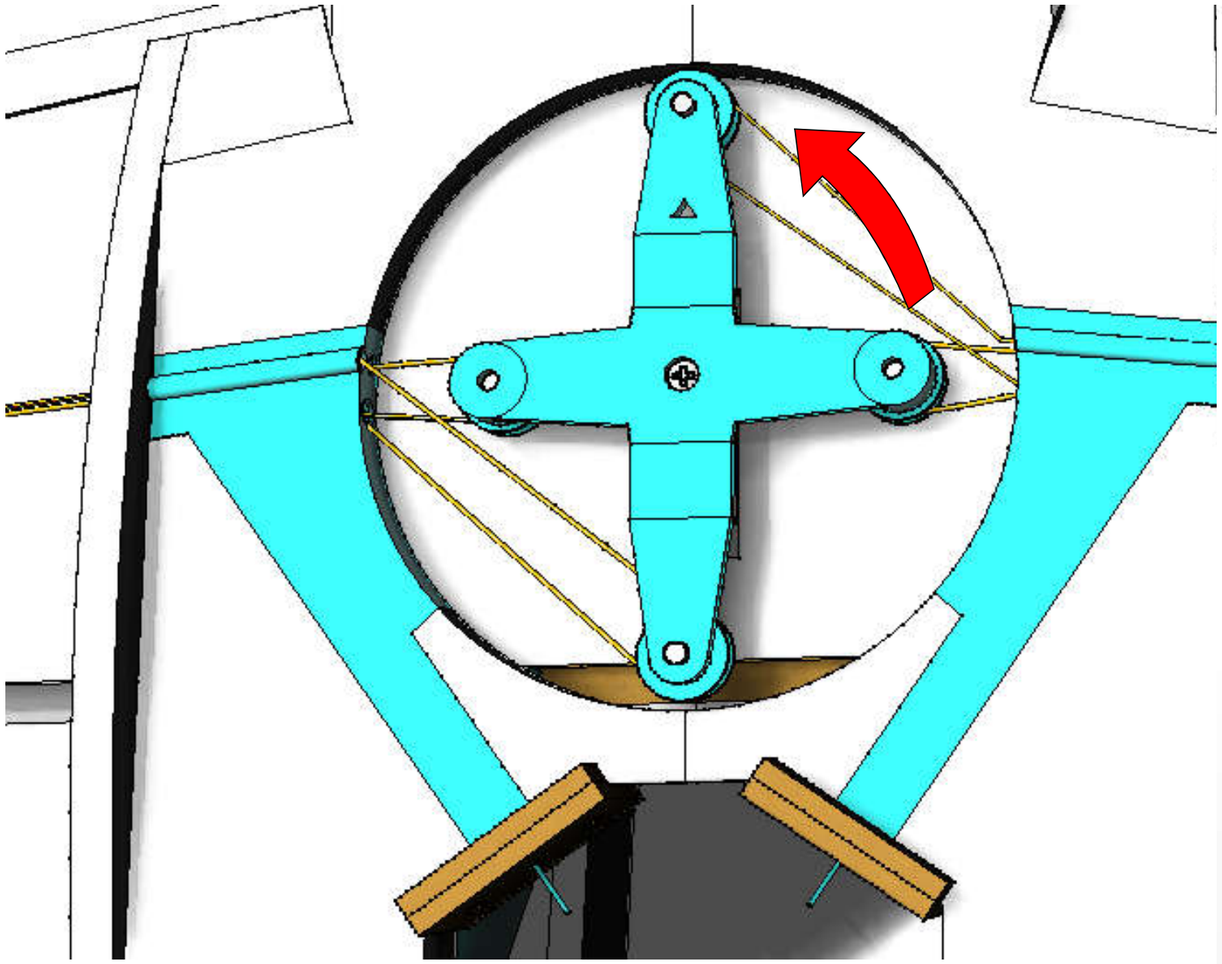

FLOATS UP

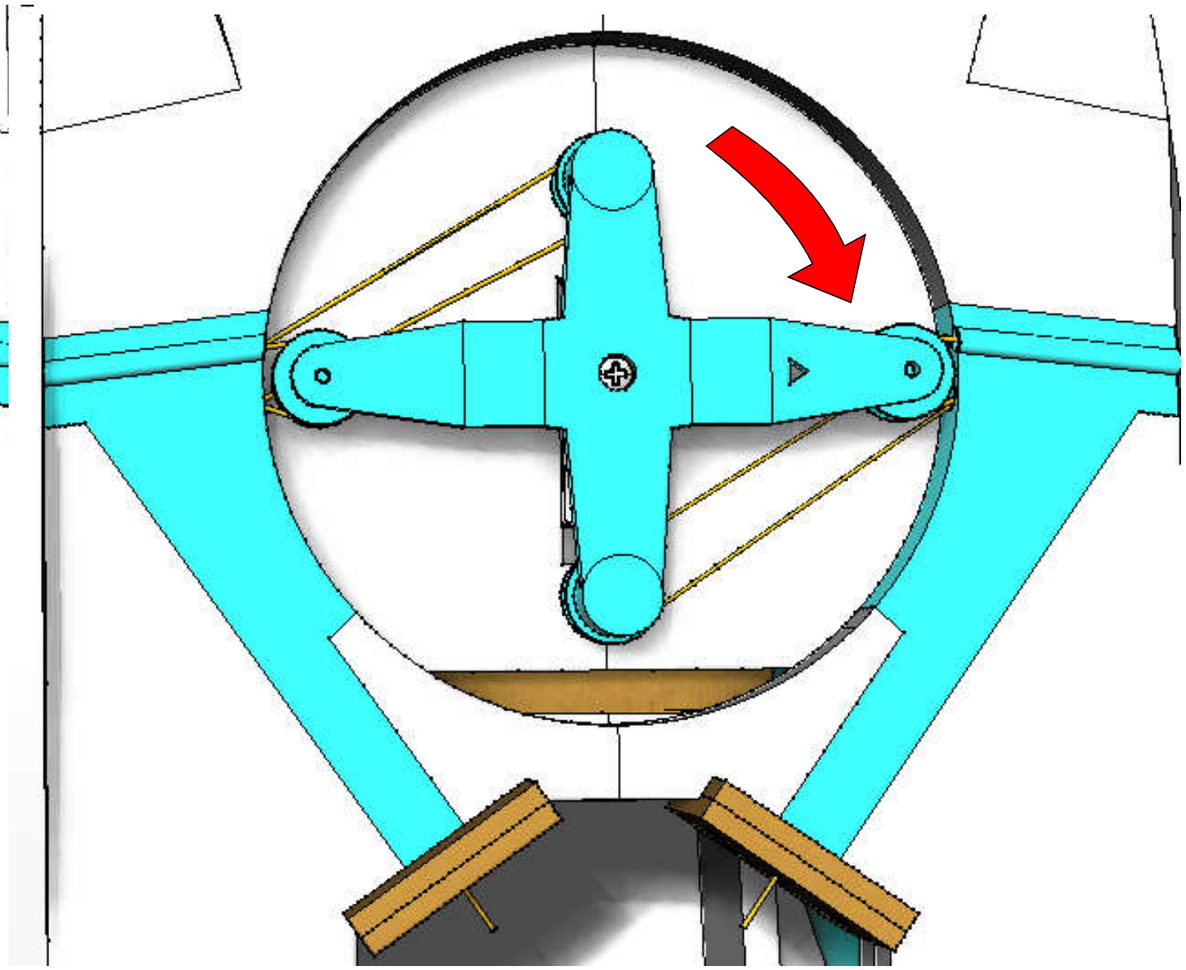

Attach the Sponson Control Horn to the Servo arm using two self tapping screws. Making sure that the the Triangular Arrow marked on the horn is facing forward for the 'Floats down' position.

Set your Travel on your transmitted to 90 degree operation, in a clockwise operation so that it represents the images above.

Program the servo speed in your transmitter so that it take 3 seconds to travel from floats down to floats up.

The Following 4 pages will show you how to thread Nylon Fishing line through the wing to rig the system,

PORT SPONSON OUTER CABLE

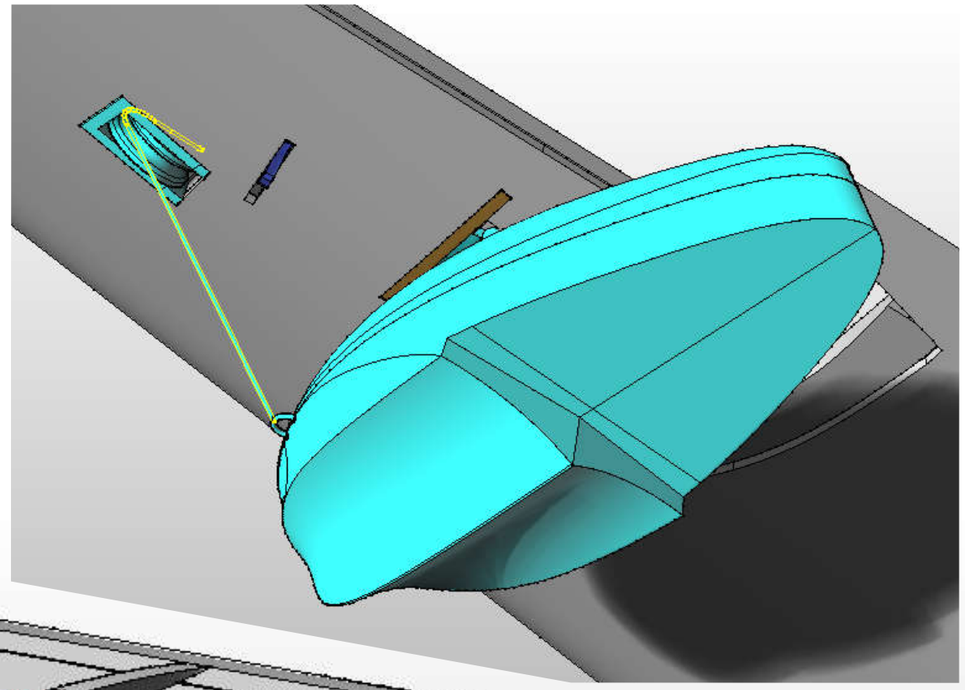

Attach the Nylon Fishing line to the outer hoop on the outboard edge of the sponson.

Then pass the line through the outside of the Thru-Wing pulley block as shown.

Run through the various wing ribs, then through the TOP tunnel in the Inner rigging block. Run the line around the pulley and then through to the Tie Board. Tie off in in position 'A'

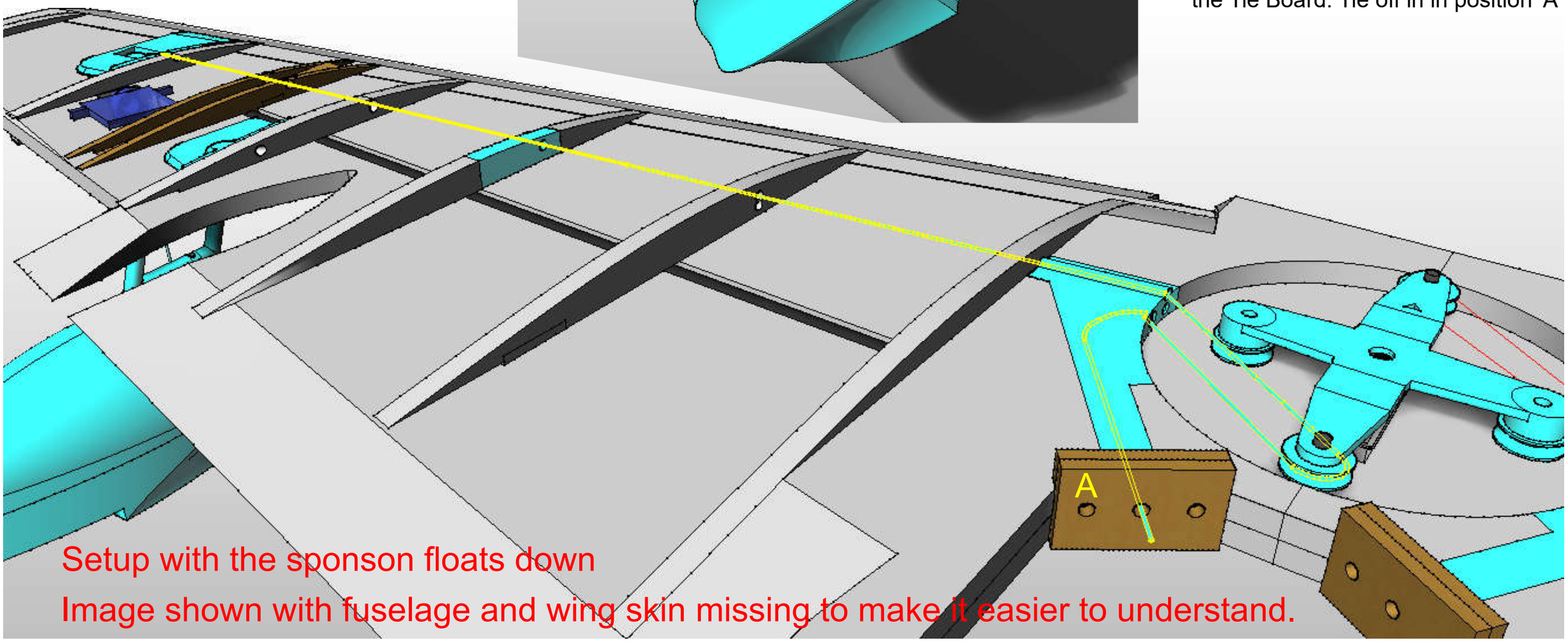

Setup with the sponson floats down

Image shown with fuselage and wing skin missing to make it easier to understand.

PORT SPONSON INNER CABLE

Attach the Nylon Fishing line to the Inner tie-bar on the inboard edge of the sponson.

Then pass the line through the outside of the hole in the cross bar on the Sponson leg, then into the thru-hull block as shown.

Run through the various wing ribs, then through the LOWER tunnel in the inner rigging block. Run the line around the pulley and then through to the Tie Board. Tie off in position 'B'

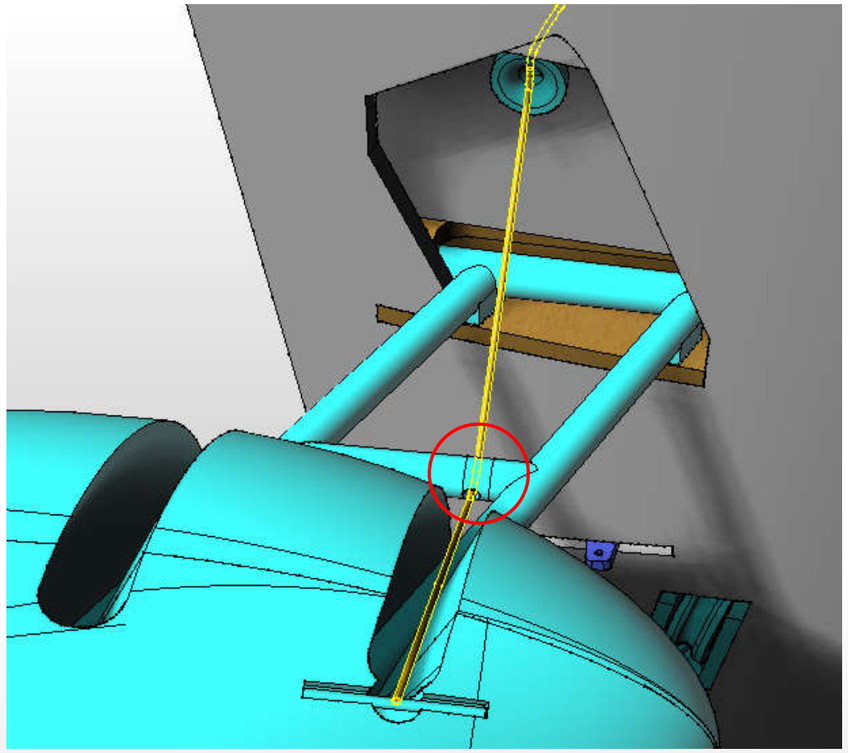

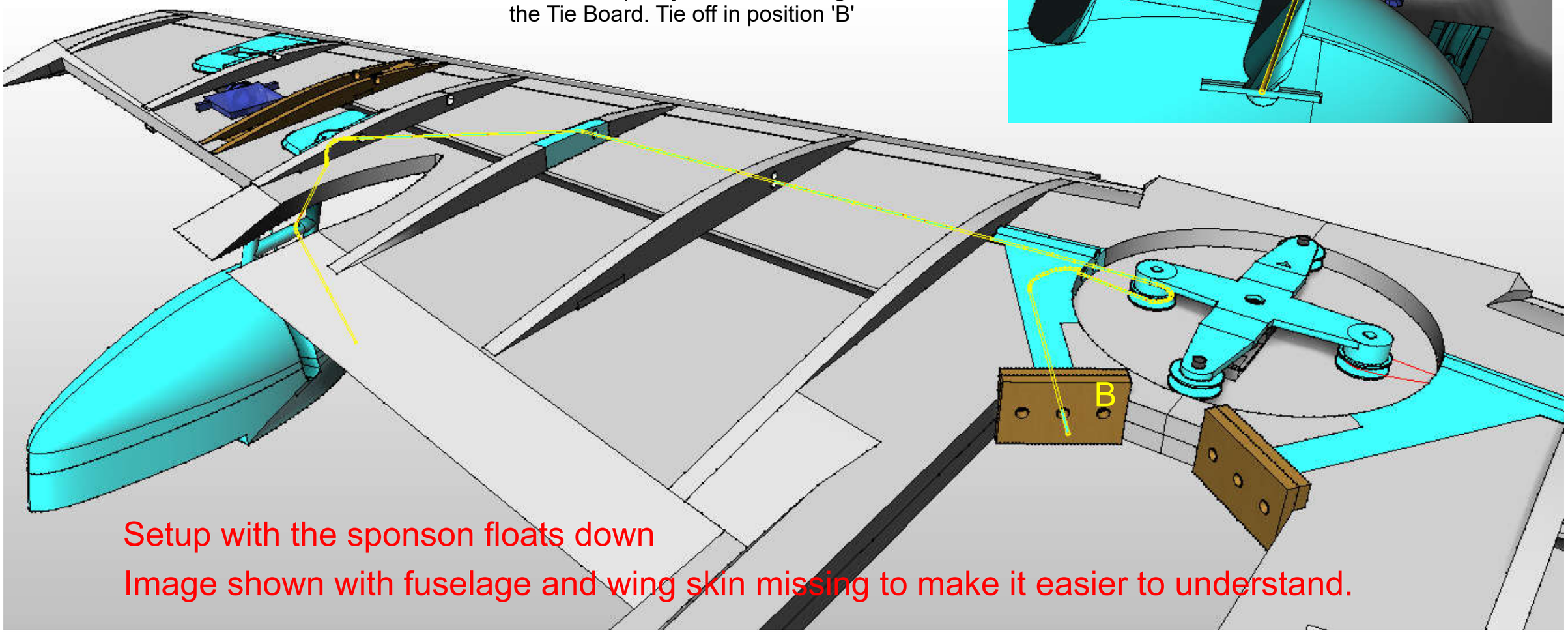

Setup with the sponson floats down

Image shown with fuselage and wing skin missing to make it easier to understand.

STARBOARD SPONSON INNER CABLE

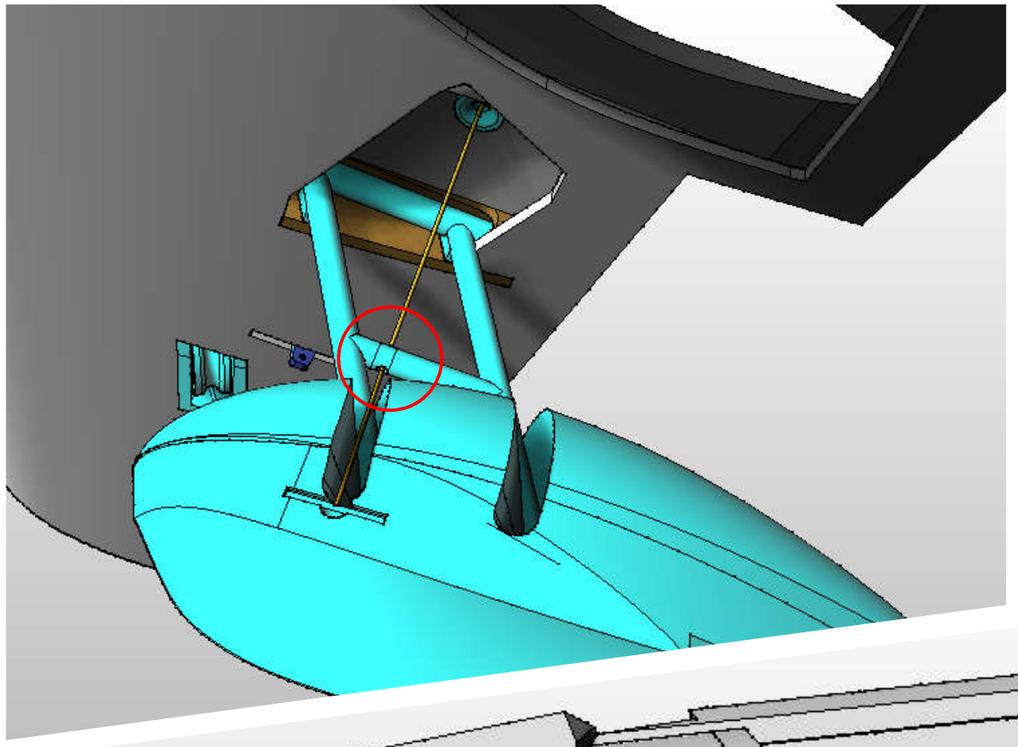

Attach the Nylon Fishing line to the Inner tie-bar on the inboard edge of the sponson.

Then pass the line through the outside of the hole in the cross bar on the Sponson leg, then into the thru-hull block as shown.

Run through the various wing ribs, then into the LOWER tunnel in the inner rigging block, then run around the pulley and then through to the Tie Board. Tie off in position 'C'

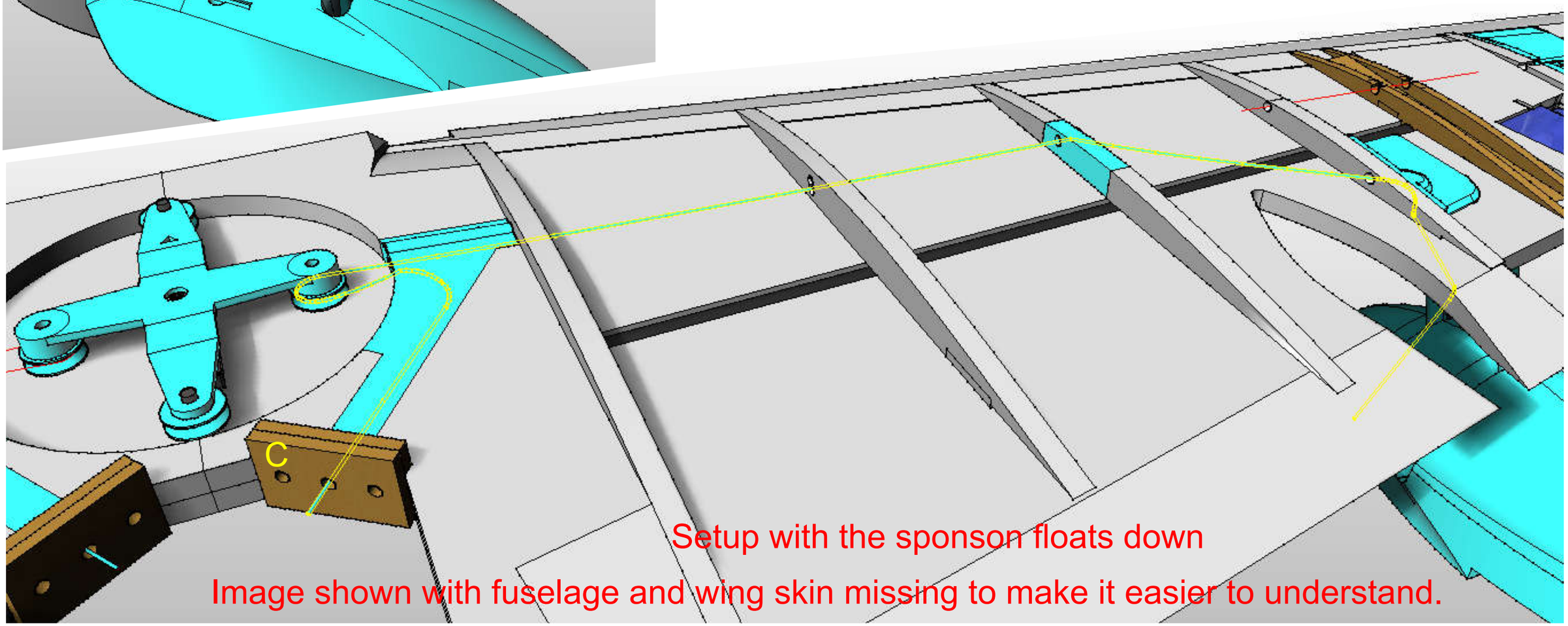

Setup with the sponson floats down

Image shown with fuselage and wing skin missing to make it easier to understand.

STARBOARD SPONSON OUTER CABLE

Attach the Nylon Fishing line to the outer hoop on the outboard edge of the sponson.

Then pass the line through the outside of the Thru-Wing pulley block as shown.

Run through the various wing ribs, then Through the TOP tunnel in the Inner rigging block. Run the line around the pulley and then through to the Tie Board. Tie off in in position 'D'

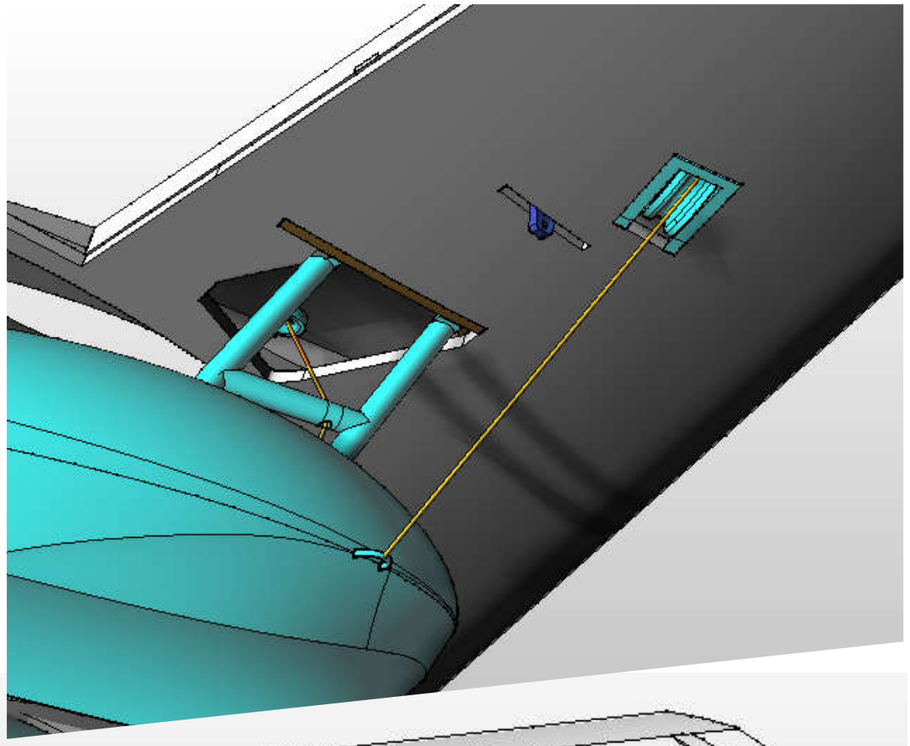

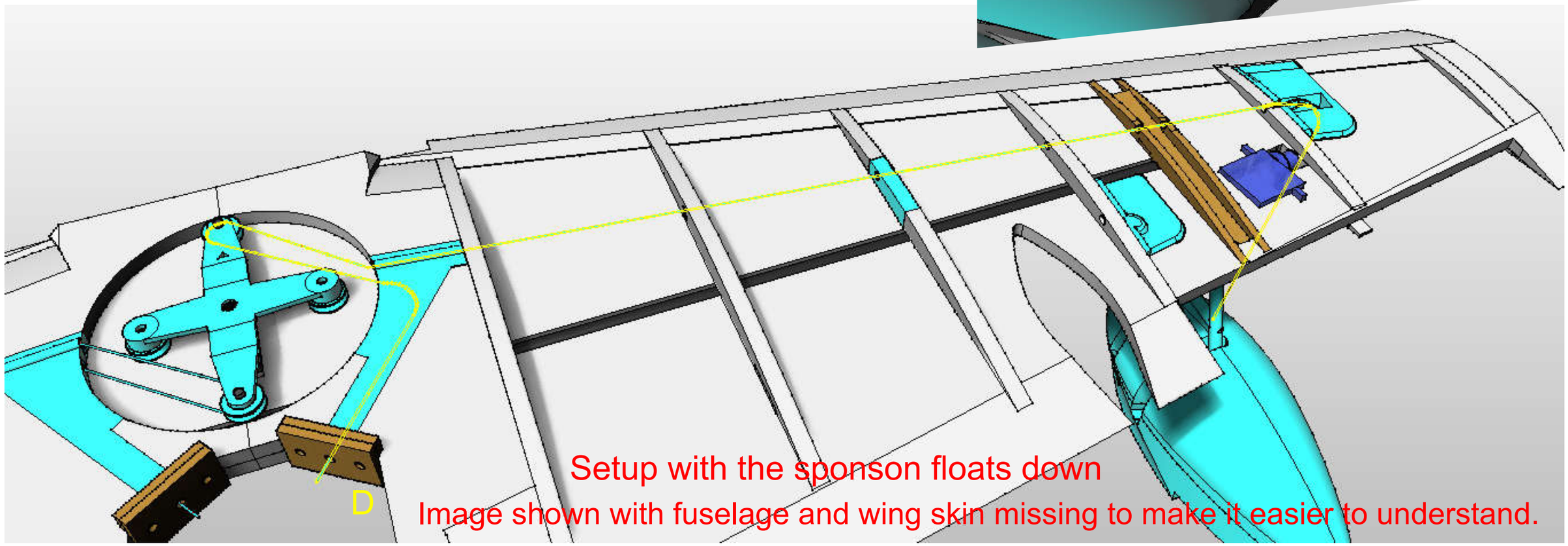

Setup with the sponson floats down

Image shown with fuselage and wing skin missing to make it easier to understand.

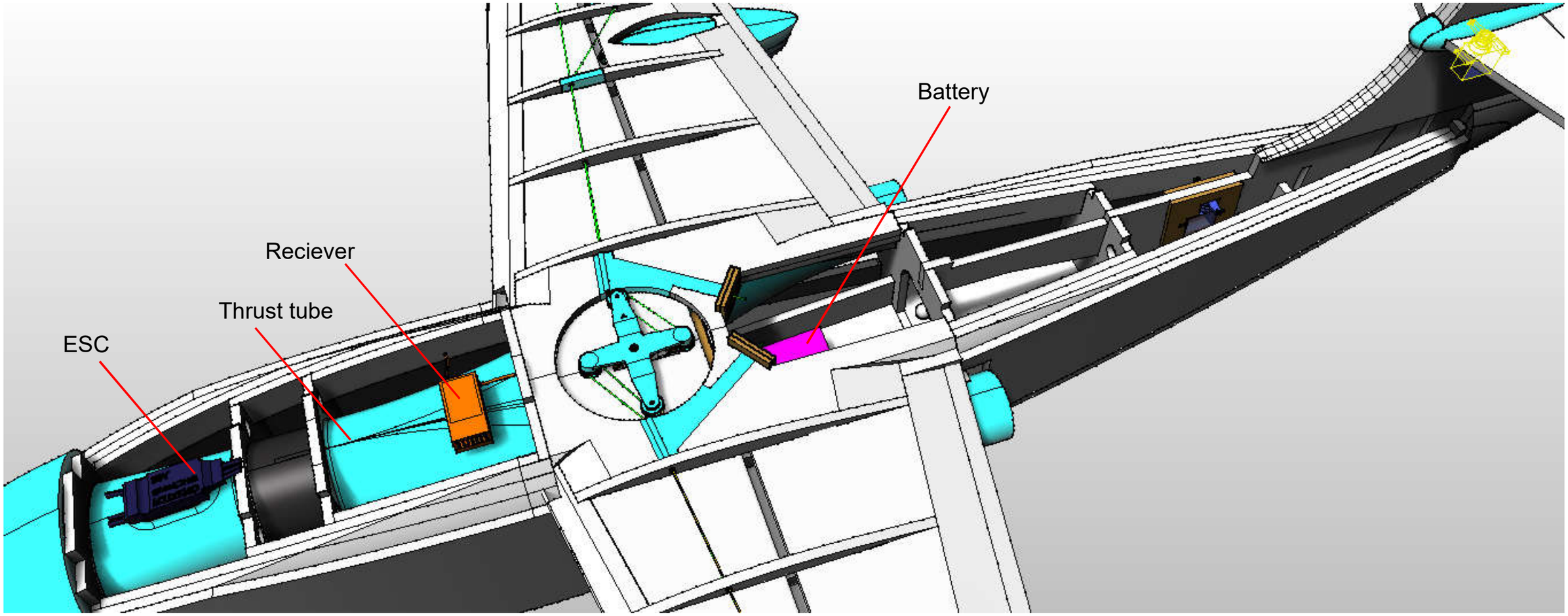

Use a hot soldering iron tip to puncture the thrust tube to pass the motor cables through. Connect using **brass bullet connectors** so you can test and reconnect later in the build - If you look ahead in the manual you will see the route the motor cables will need to travel, so allow enough cable length to pass the wires 'through the tunnel'

Run the ESC battery cables into the fuselage battery area to the battery connector - If you need more space to do a U-turn in front of the ESC with the power cables, there is a recess in the nosecone to give you a larger radius - trim away a hole to access it. Run the Servo cable from the ESC to the RX.

Run **all** servo cables to the RX, using servo extension cables and Y leads if required. running through the dedicated holes, and tacking to the sides of the fuselage to keep them tidy.

Once wired up, thoroughly test all electronics to ensure they function correctly, making sure there are no loose connections anywhere or dry solder joints.

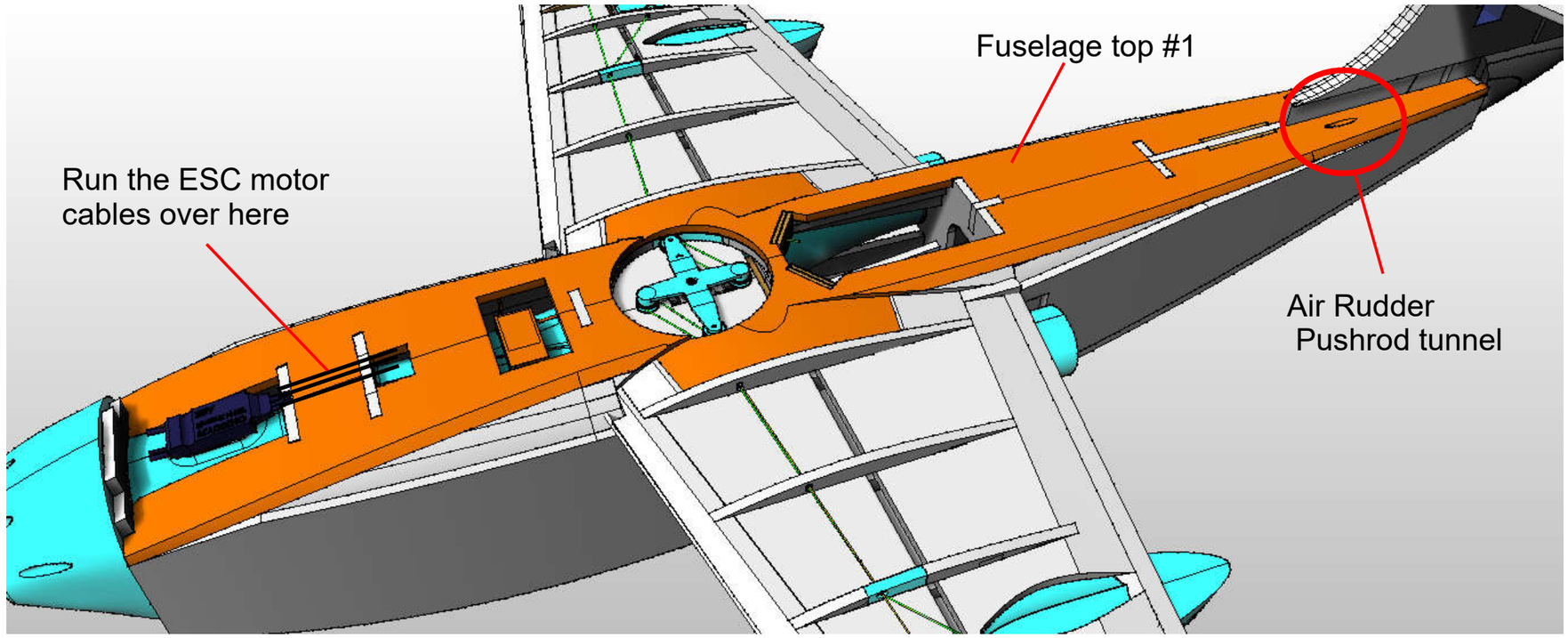

Connect the Air-Rudder Pushrod to the servo, and then glue the **Fuselage top #1** to the assembly allowing the pushrod to protrude.

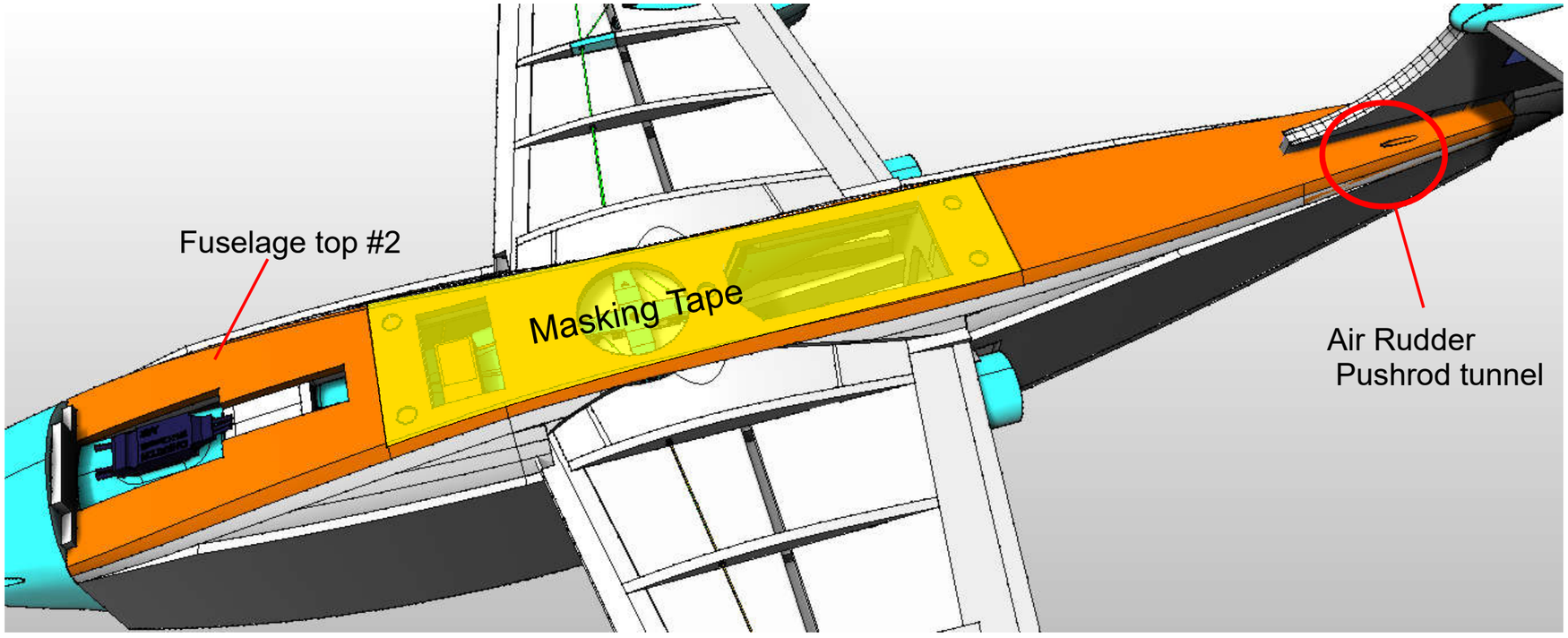

Glue the **Fuselage top #2** to the assembly allowing the pushrod to protrude.

Cover the hatch area with masking tape (shown yellow) to prevent glue touching this zone on later stages of the build process.

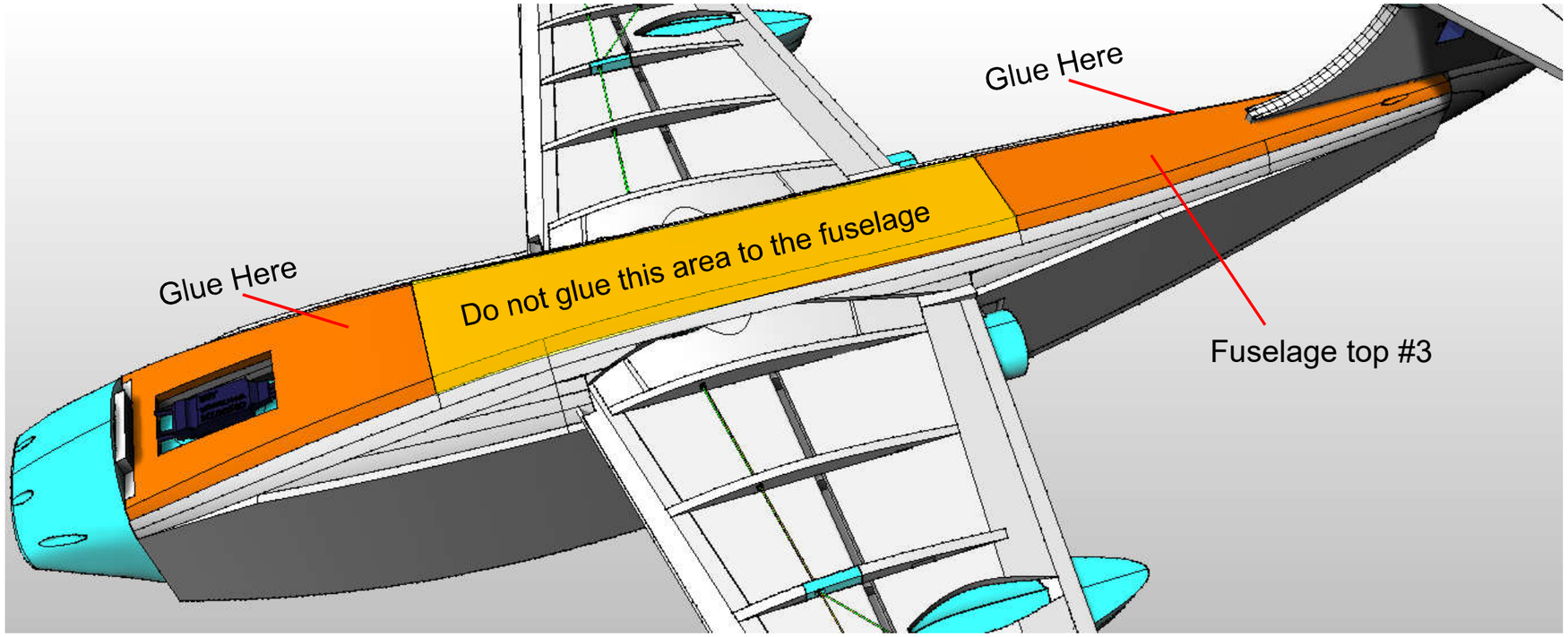

Glue the **Fuselage top #3** to the assembly allowing the pushrod to protrude.

Don't glue to the area covered with masking tape.

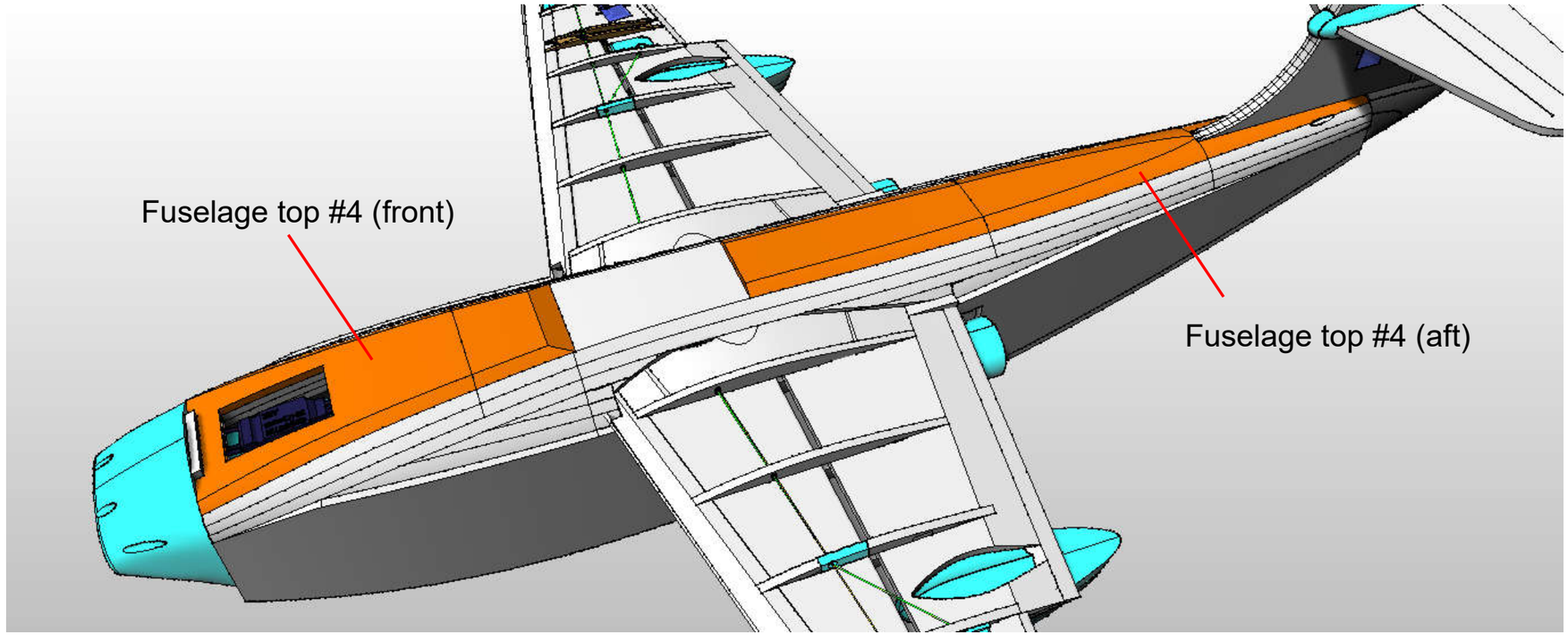

Glue the two pieces of **Fuselage top #4** to the assembly allowing the rudder pushrod to protrude.

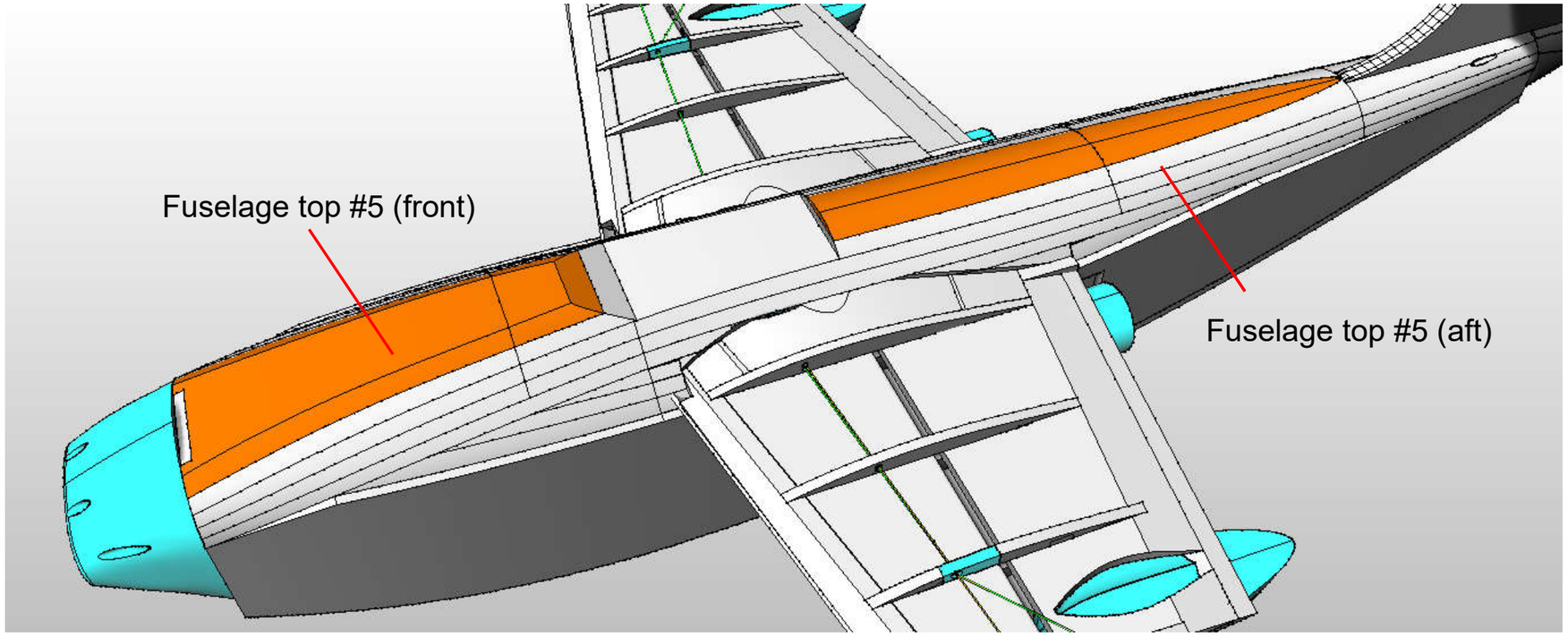

Glue the two pieces of **Fuselage top #5** to the assembly.

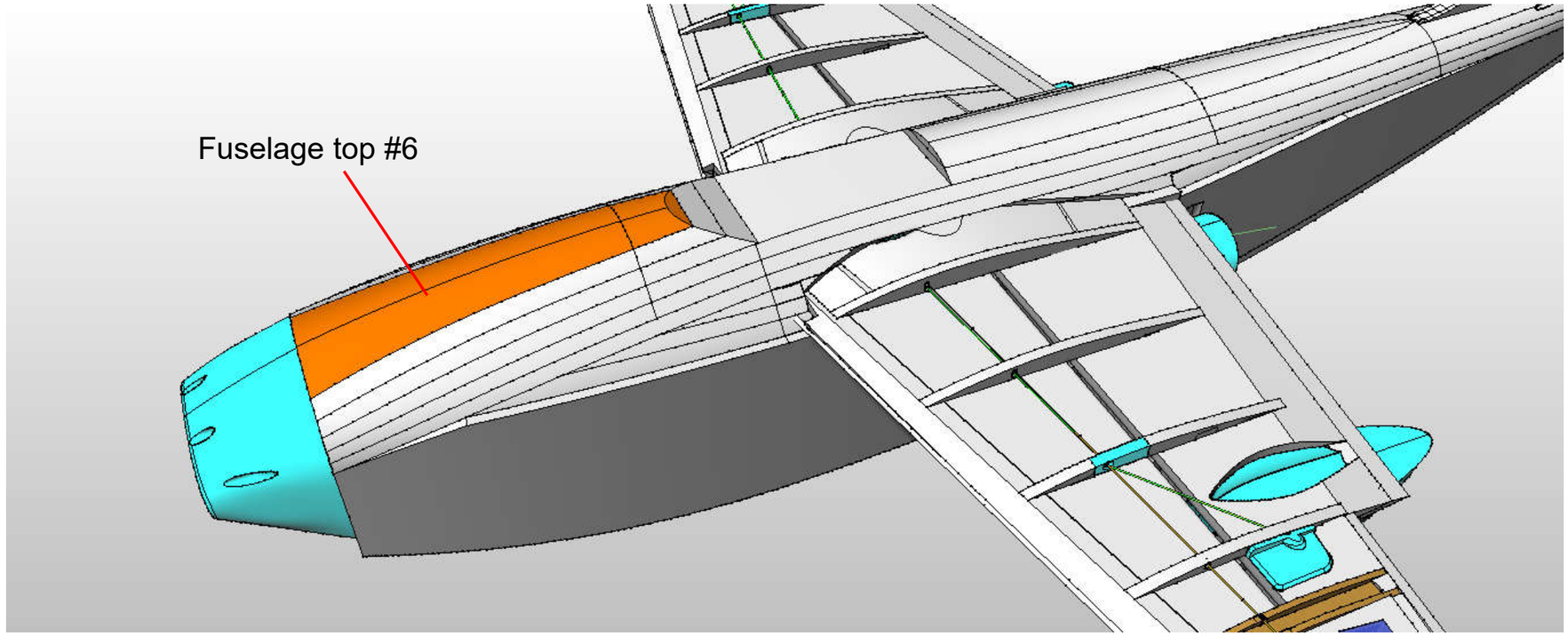

Glue **Fuselage top #6** to the assembly.

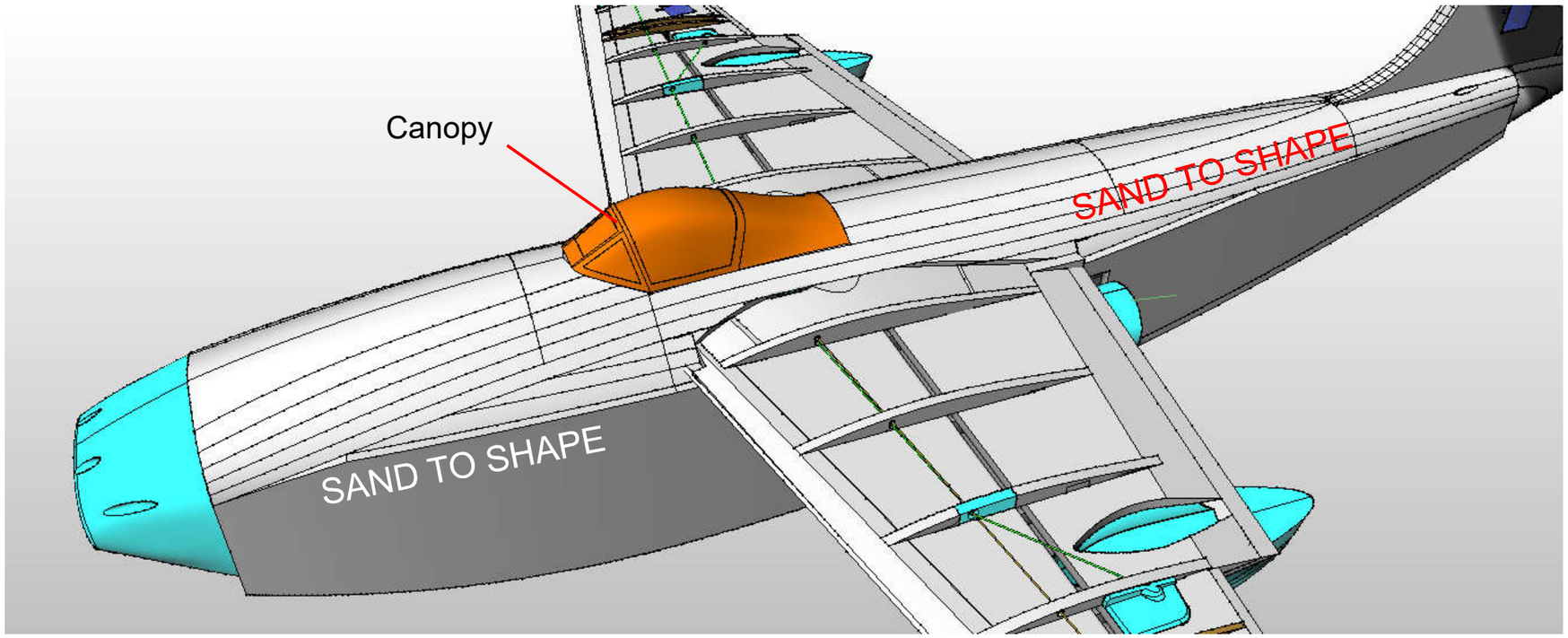

Glue the Canopy to the assembly then using a sanding block and sandpaper, shape the fuselage to represent the real aircraft.

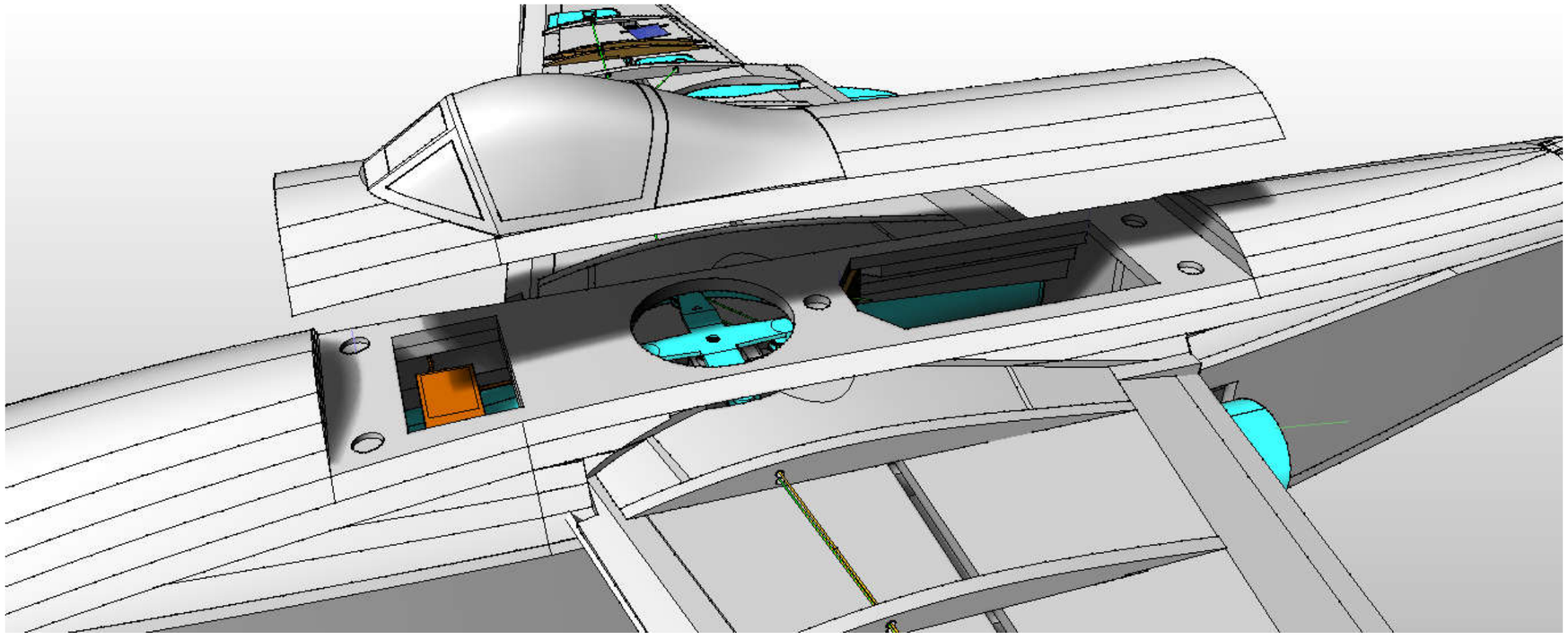

Very carefully, using an extendable craft knife, trim away the hatch area and remove the masking tape left from the previous build step.

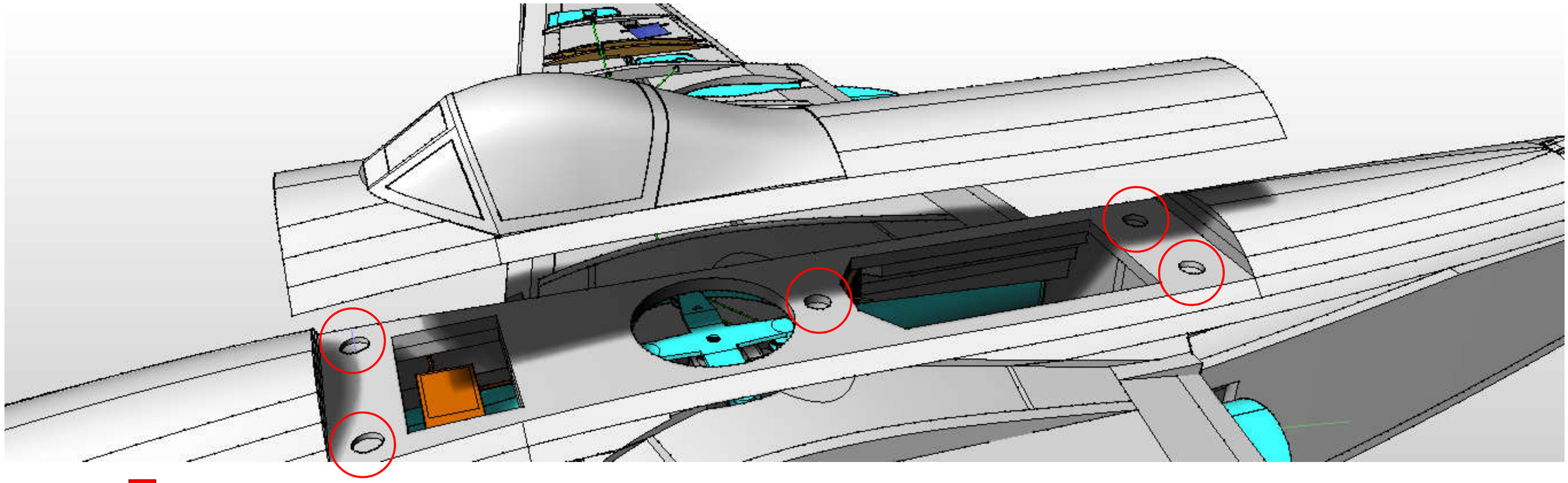

Glue button magnets to the hatch and fuselage as per this guide in the areas identified above.

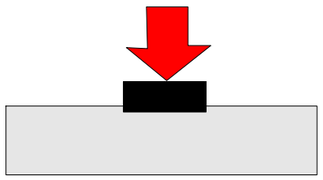

1. press magnet into depron to impress shape.

2. Dig out a recess for the magnet using a sharp knife.

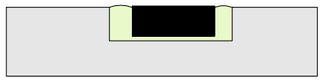

3. Apply glue into recess and push magnet into it.

4. Whilst still wet, lay masking tape over the area.

5. When fully cured, remove tape and put adjoining magnet on top

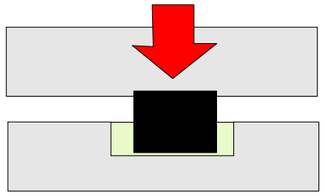

6. When correctly aligned, press adjoining depron onto the sticking up magnet to impress shape.

7. Repeat steps 2-4 for the upper part.

IMPORTANT.
Before glueing the upper magnet in, check that the magnet is the right way around!

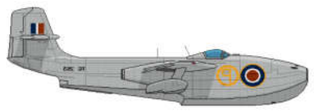

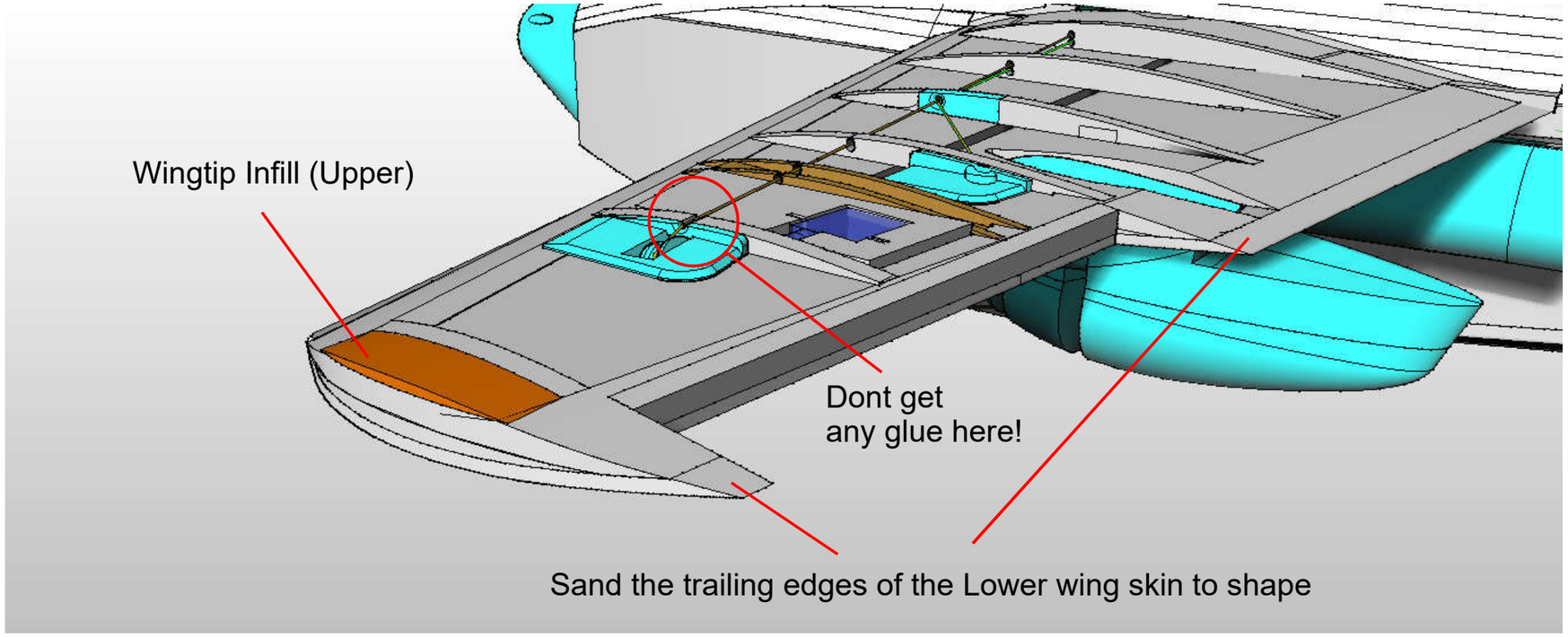

Glue the **Wingtip Infill (Upper)** in place on both wingtips.

Using a long sanding block, carefully sand the faces of the wing to create good bonding surfaces to stick the upper wing skin to (next step)

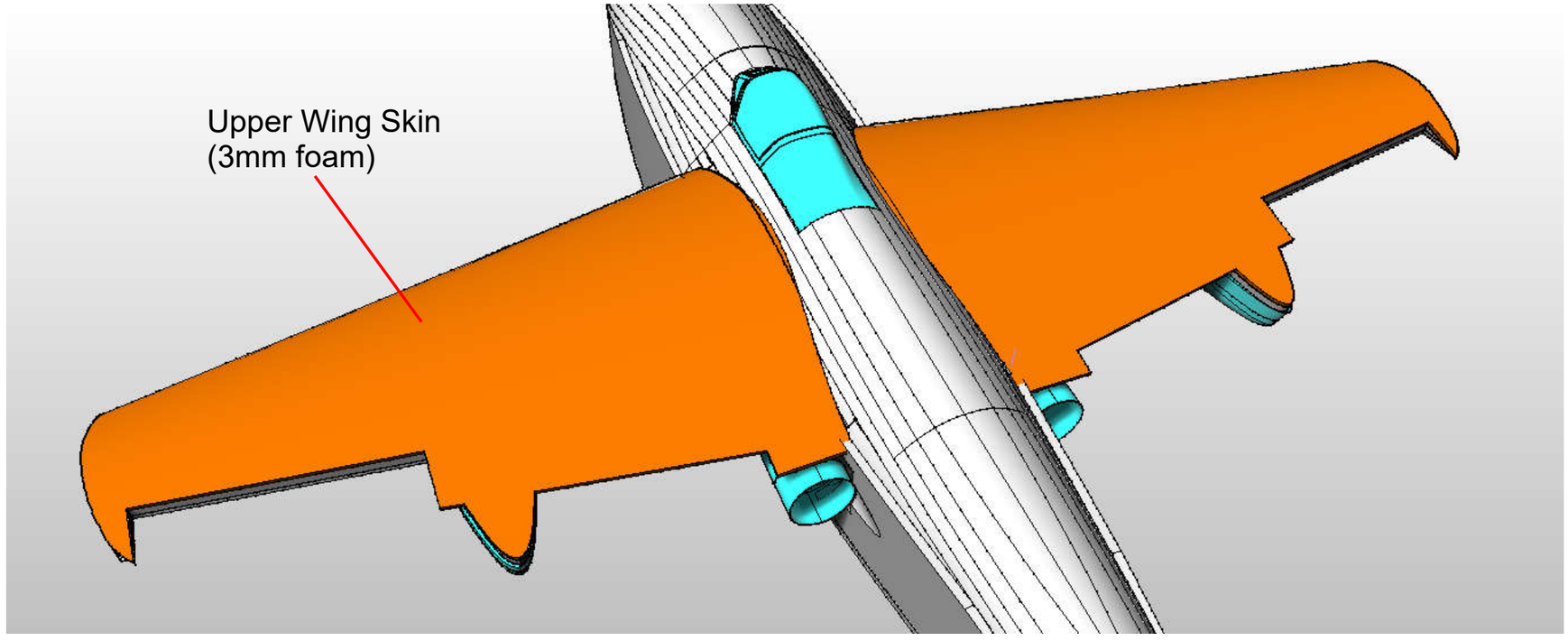

Be careful not to get any glue near to the Float rigging lines. Cut both 3mm foam **Upper Wing Skins** slightly oversize and adjust to fit well over the wing.

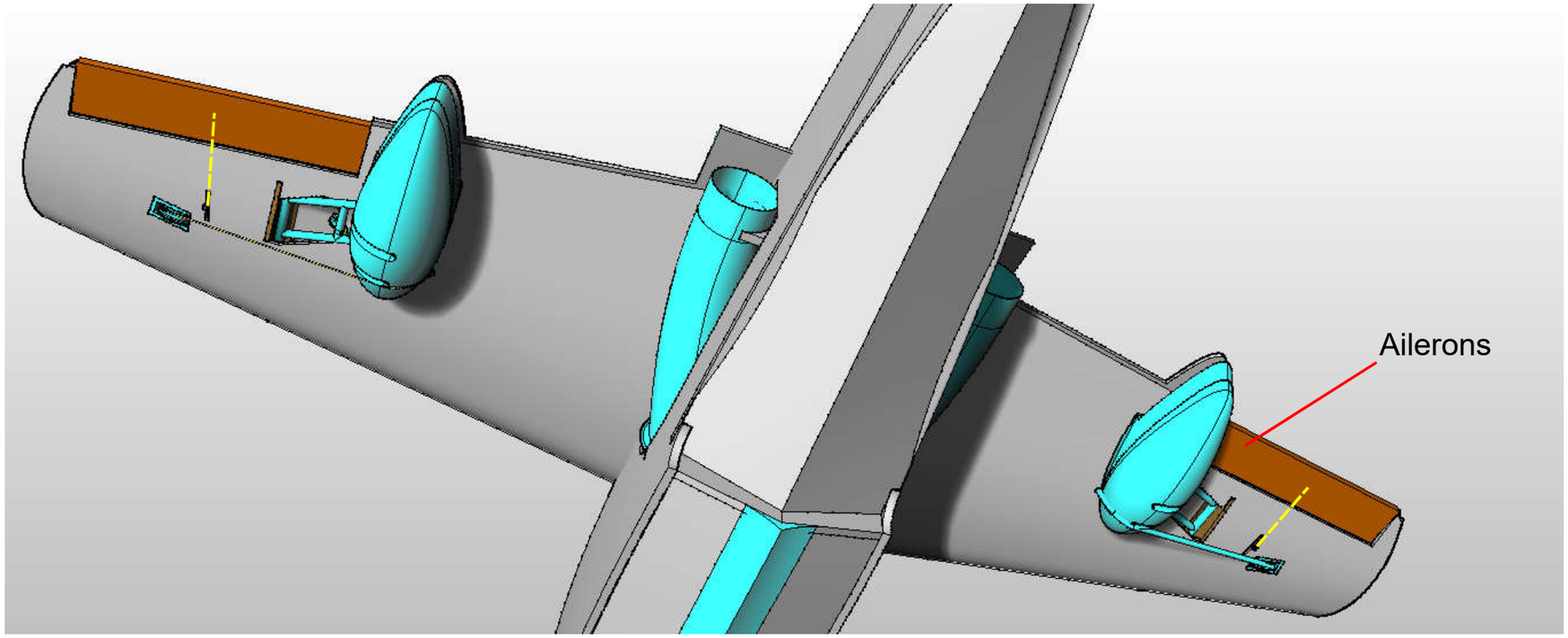

Sand the two **Ailerons** to match the aerofoil of the wing, then attach to the wings.

Connect to the wing servo horns and test.

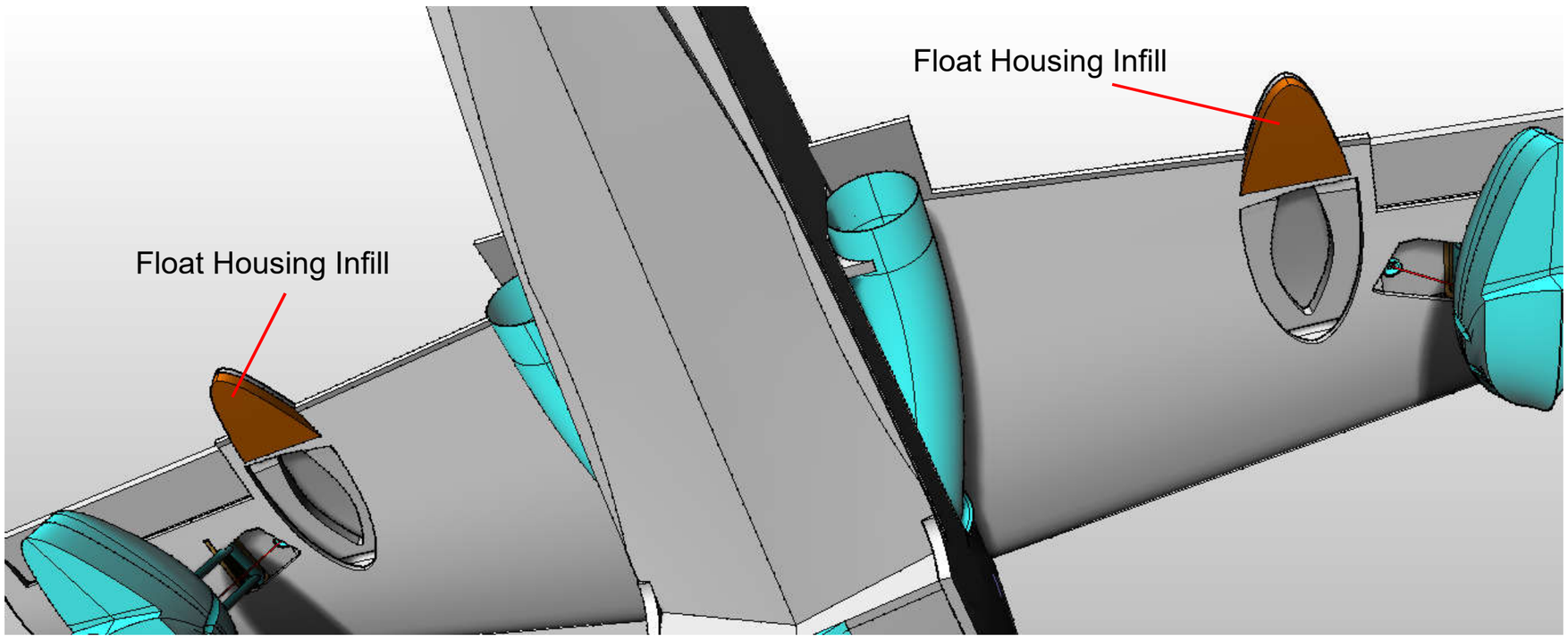

Shape and Glue the **Float Housing Infill** pieces to fill the gap when the sponson floats are retracted. You may wish to build this area up some more to get closer tolerances.

(mirrored onto the other wing).

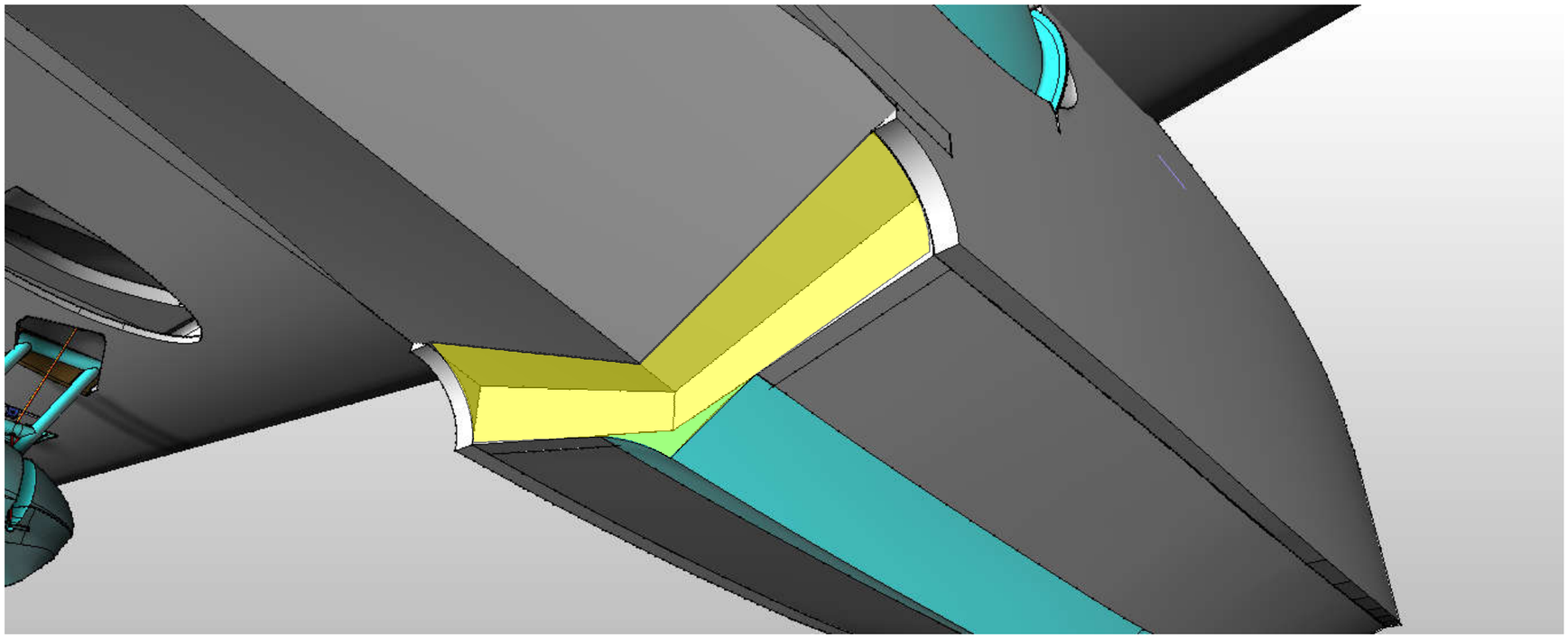

Using Lightweight filler.
Shape the Hull Step (shown in yellow) to match the radius indicated on the hull sides.

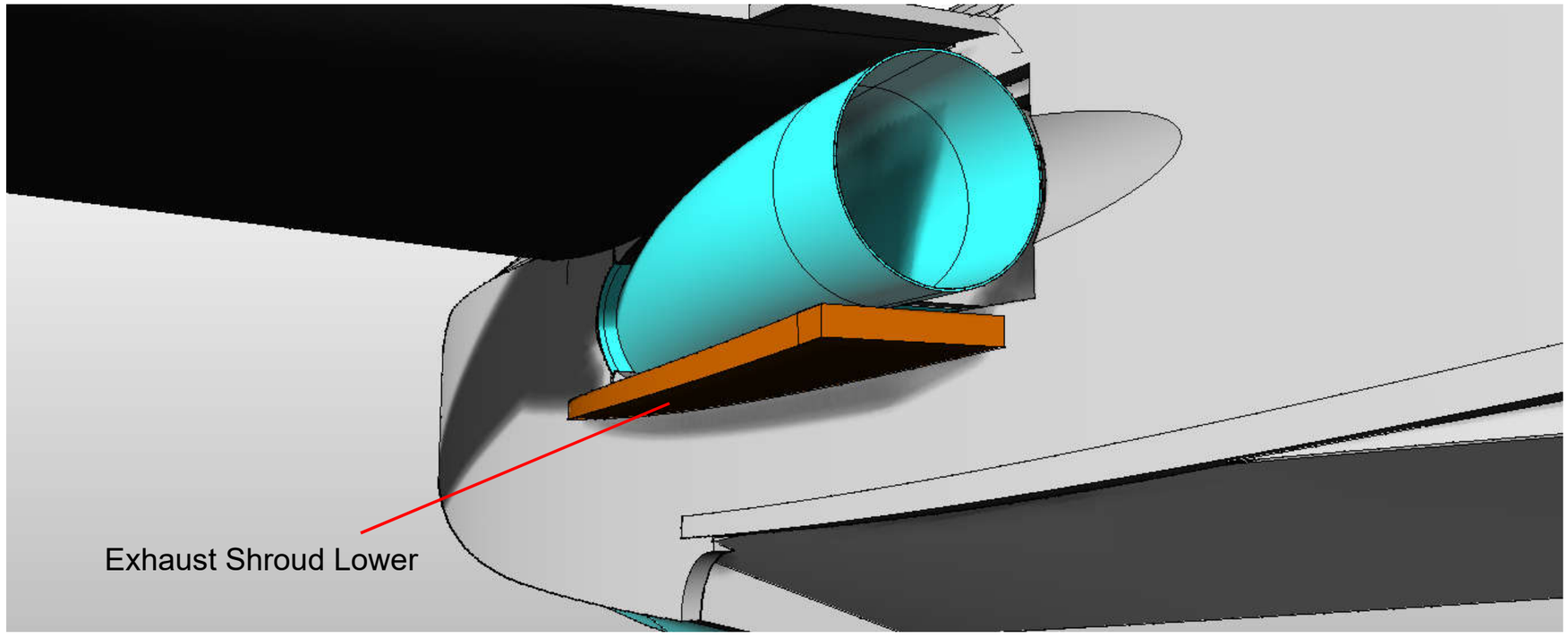

Using the markings on the plan to locate it, gently curve and glue the **Exhaust Shroud Lower** in place on both sides as shown.

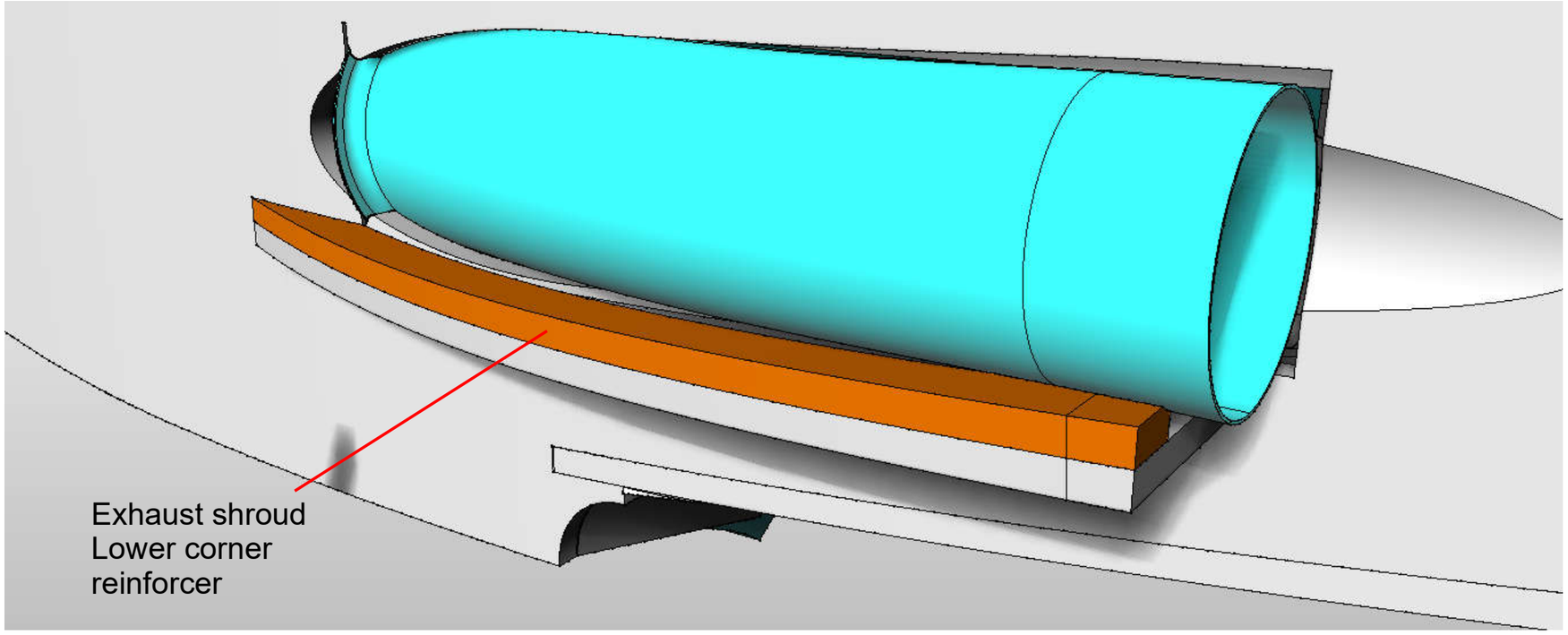

Glue the **Exhaust Shroud Lower Corner Reinforcers** in place on both sides as shown.

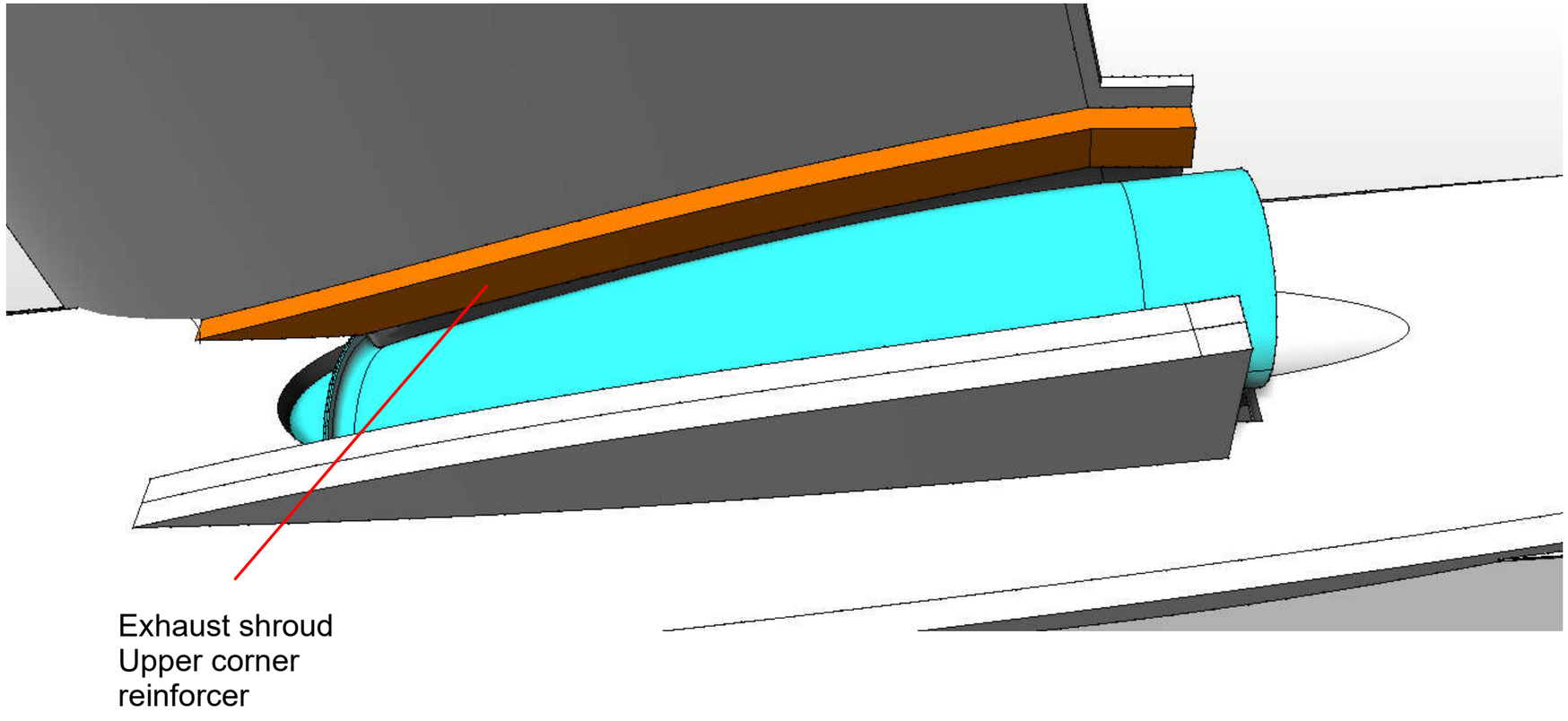

Glue the **Exhaust Shroud Upper Corner Reinforcers** in place on both sides as shown.

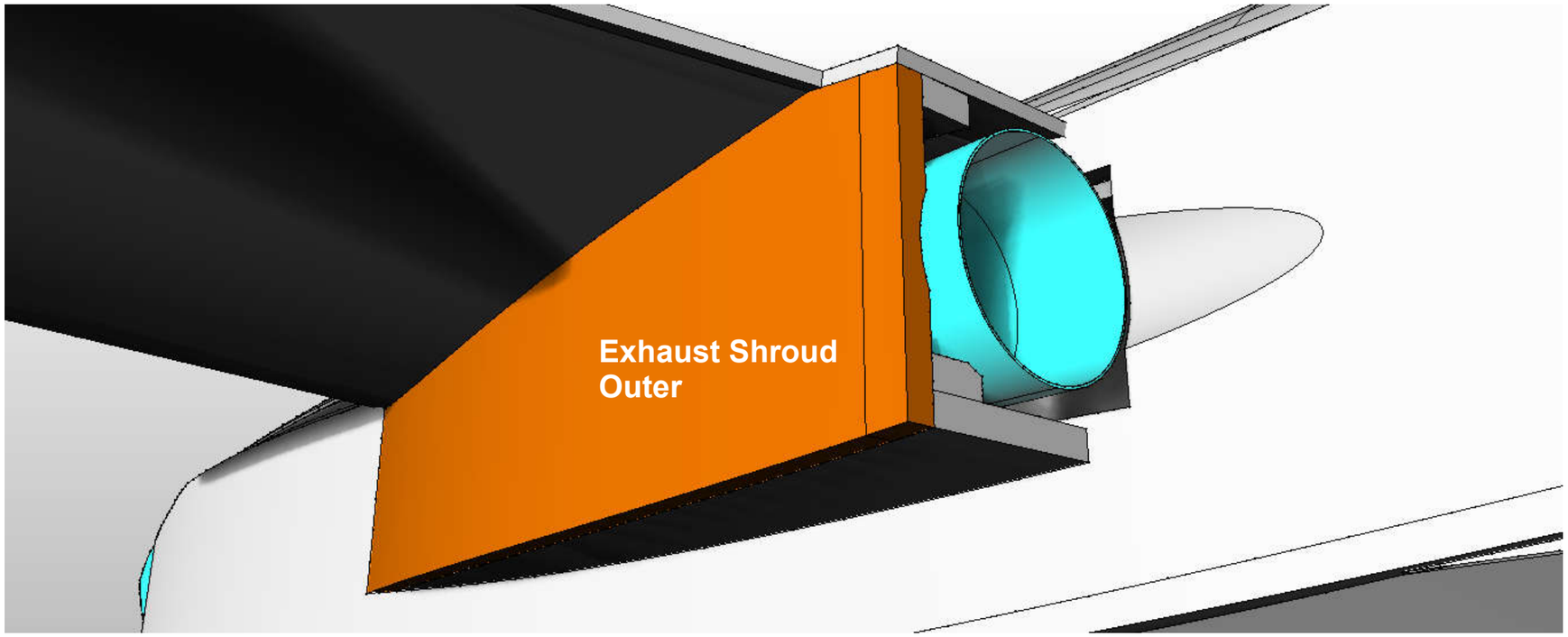

Glue the **Exhaust Shroud Outer** in place on both sides as shown.

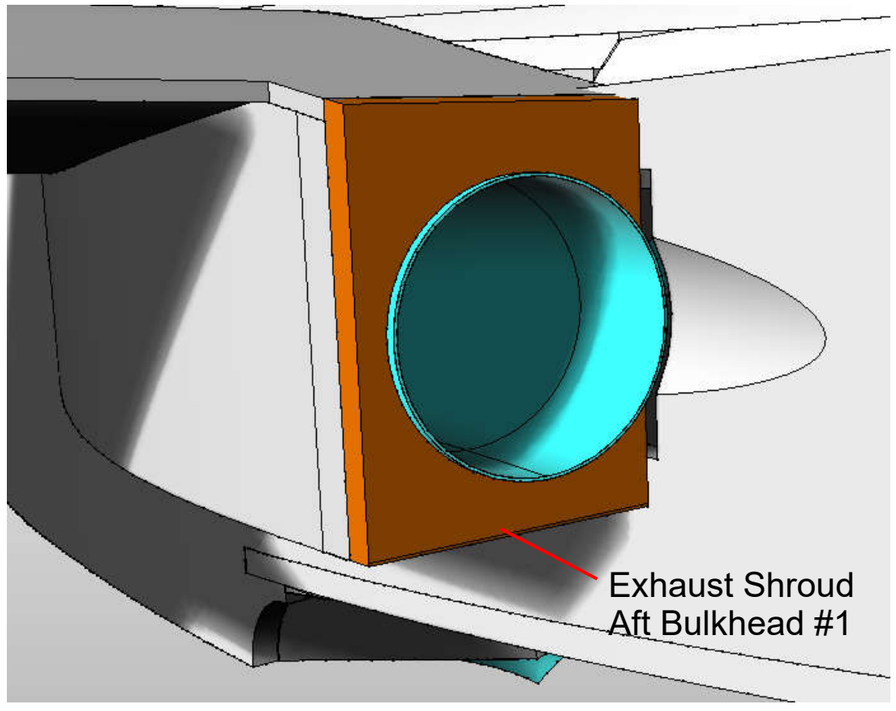

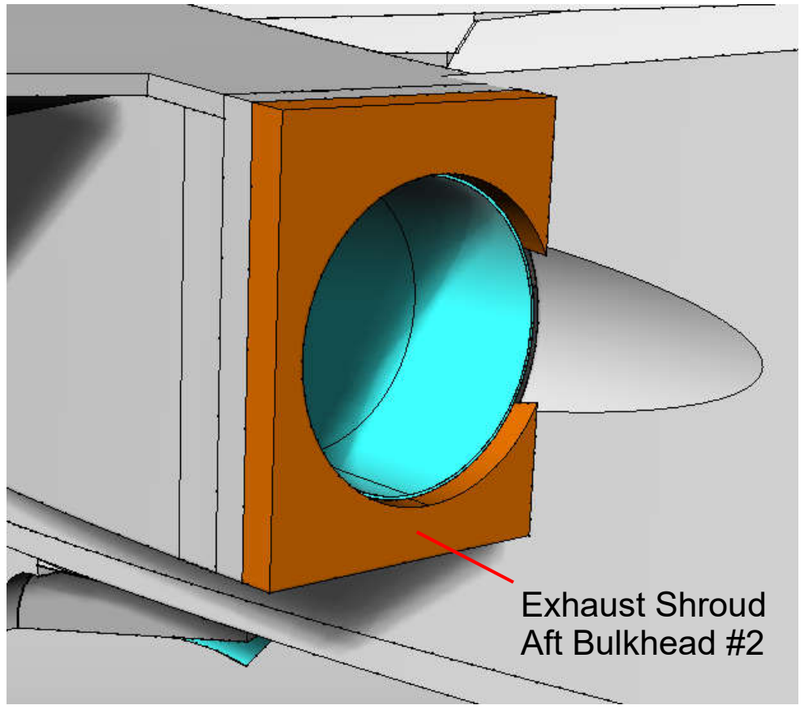

Glue the **Exhaust Shroud Aft Bulkheads** in place on both sides as shown.

Ensure a good fit to help reduce the possibility of water getting into the fuselage.

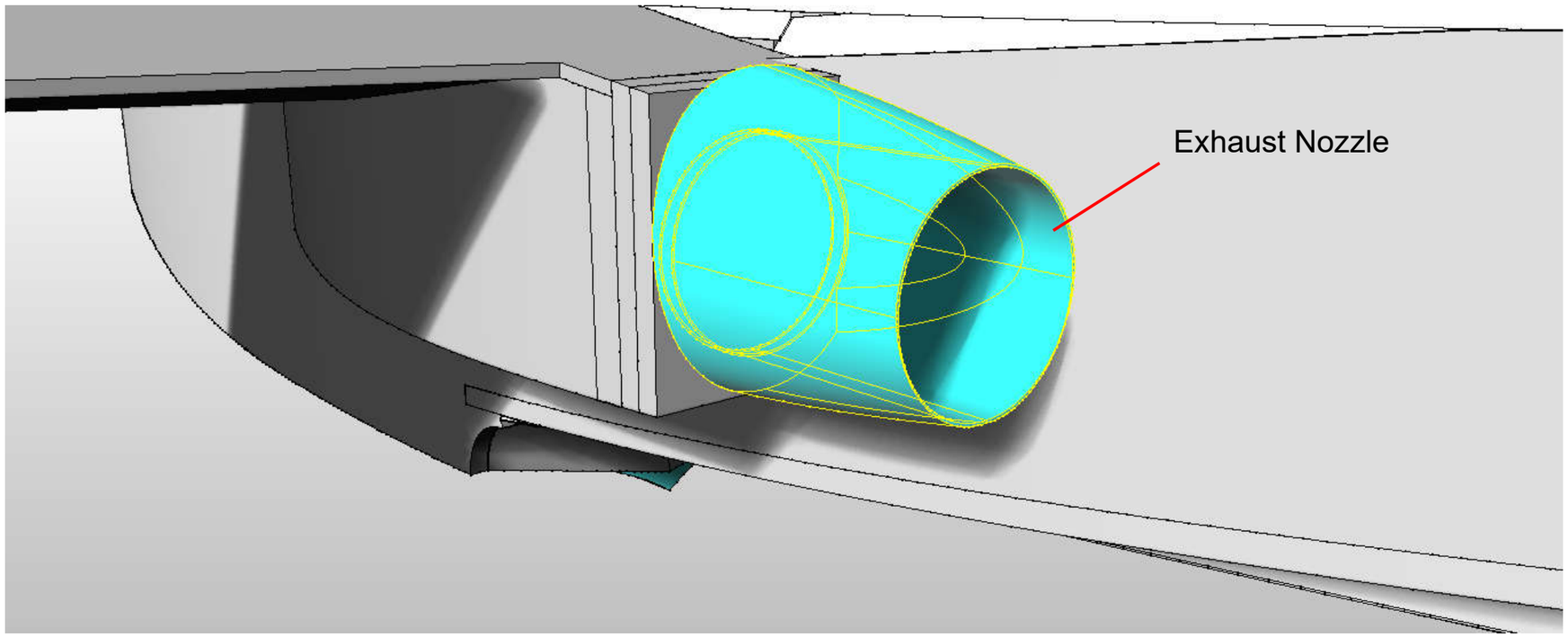

Glue the **Exhaust nozzles** to the fuselage.

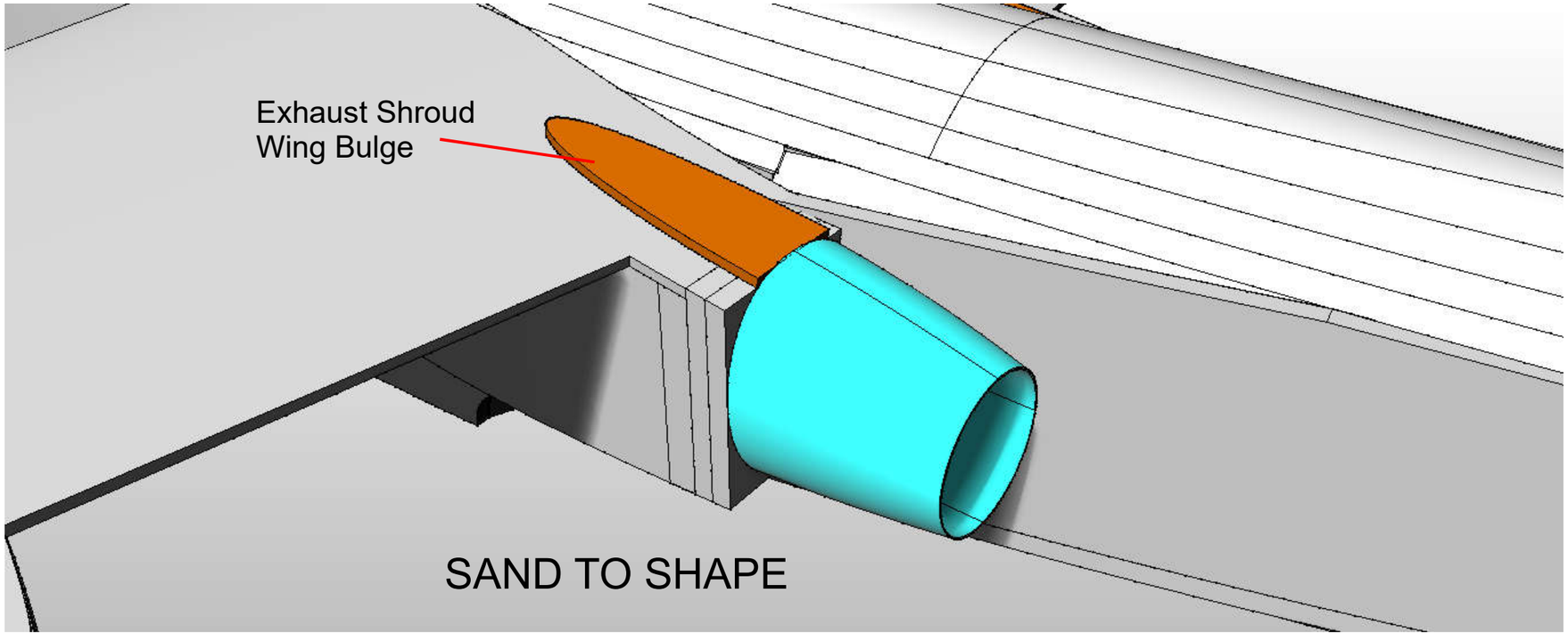

Pre-sand the **Exhaust Shroud wing bulge** (3mm foam) piece, along with sanding the foam in front of the nozzle to shape.

Glue in place.

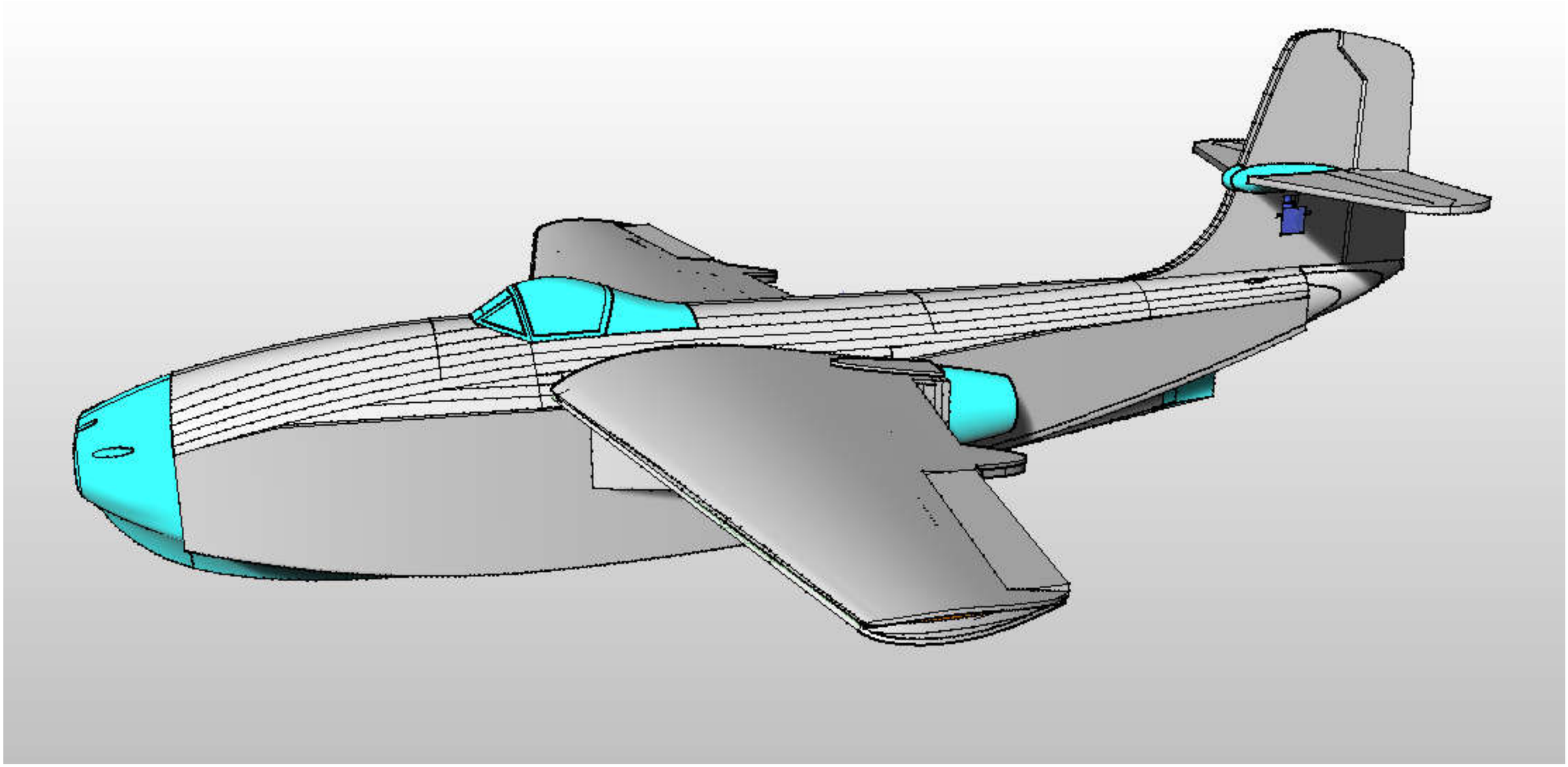

Congratulations! Your model is now complete! You will need to make sure the joints on the hull are watertight, use Epoxy/microballoons mix to fill in gaps, then fibreglass the hull with 0.6oz cloth and Water base PU. Give several more coats of WBPU to build up a smooth and water-tight finish.

Either Fly it as it is or go ahead and paint it!! Be sure to check out the painting guides on www.jetworks.online