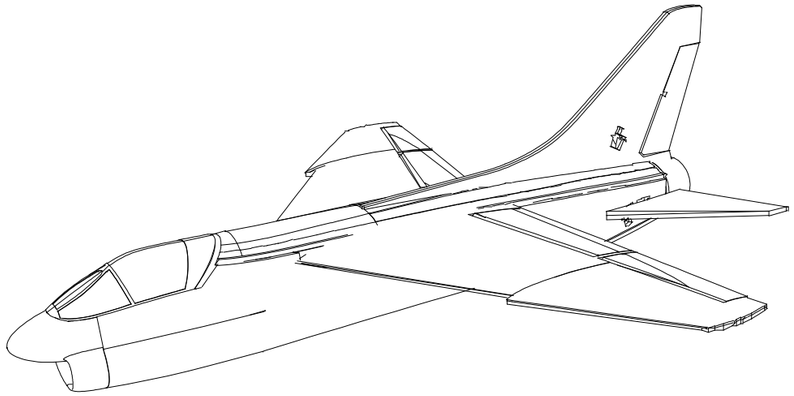

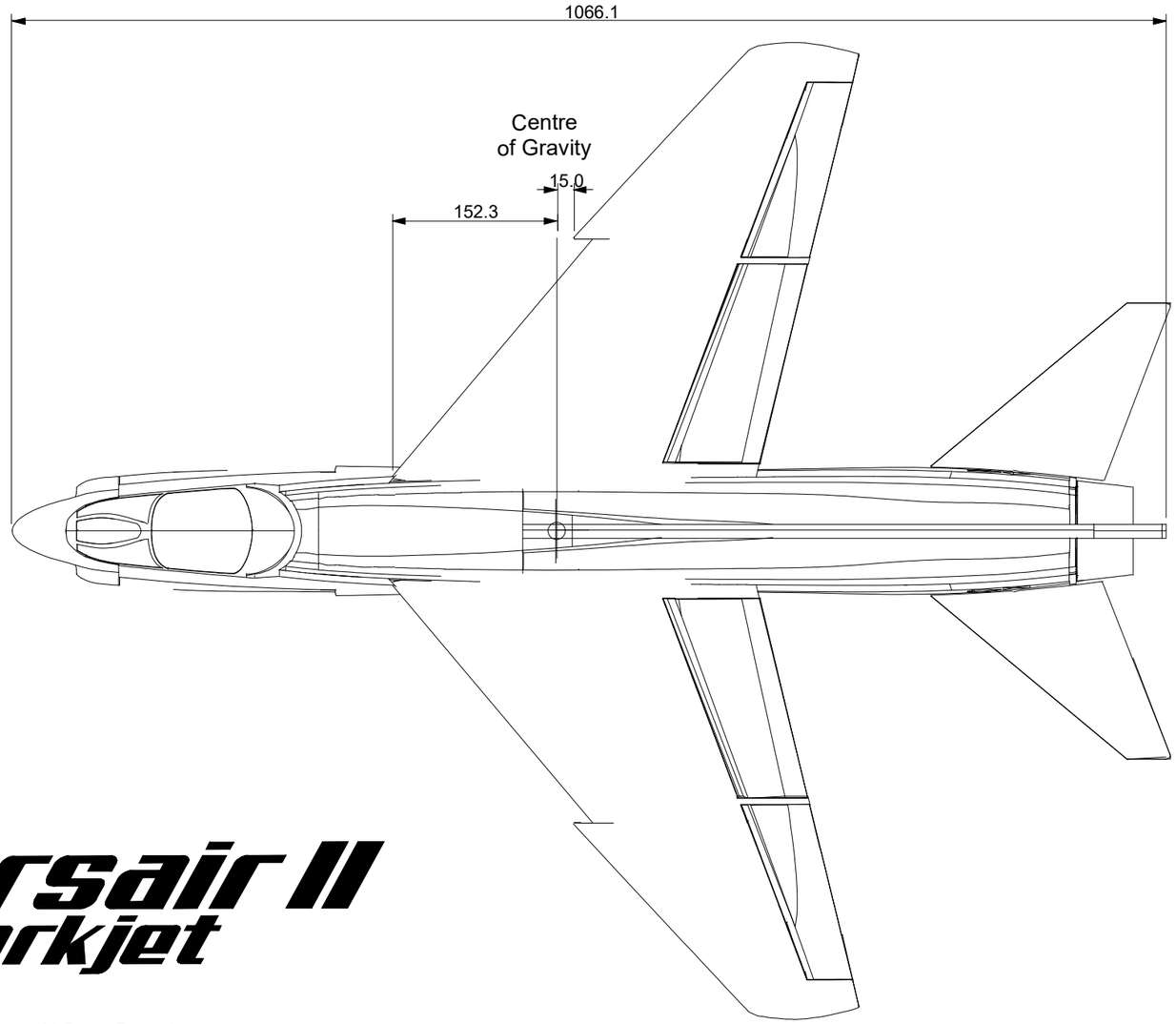

LTV A7 Corsair II Parkjet

Designed by Craig Clarkstone