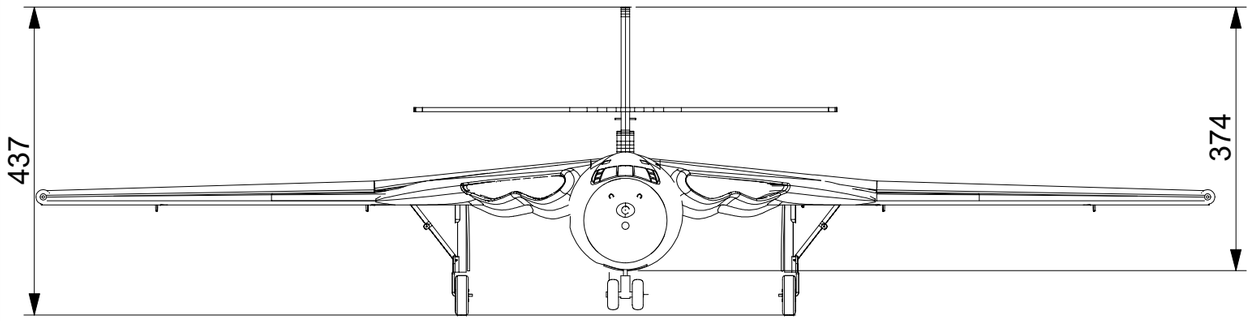

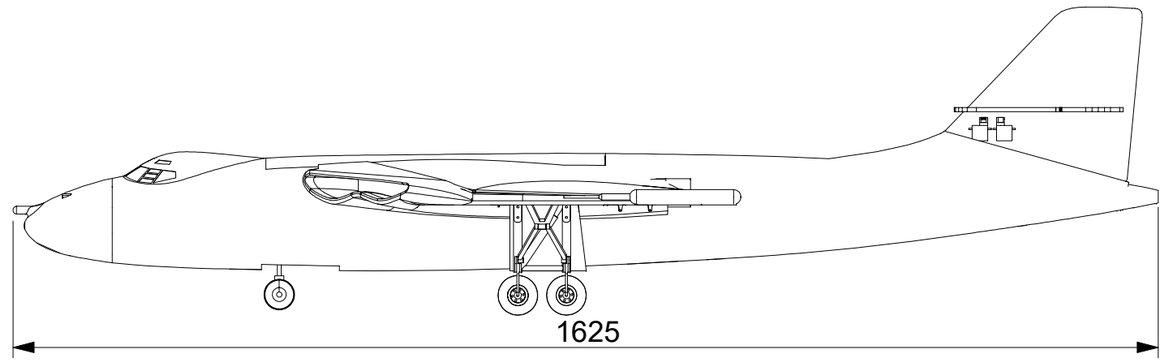

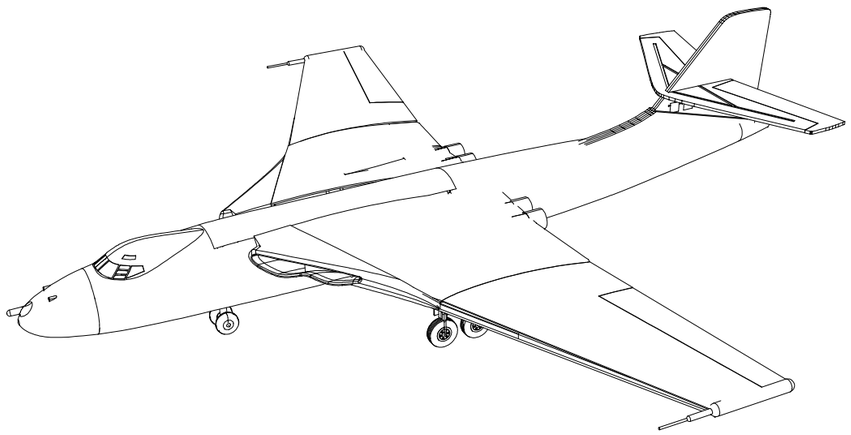

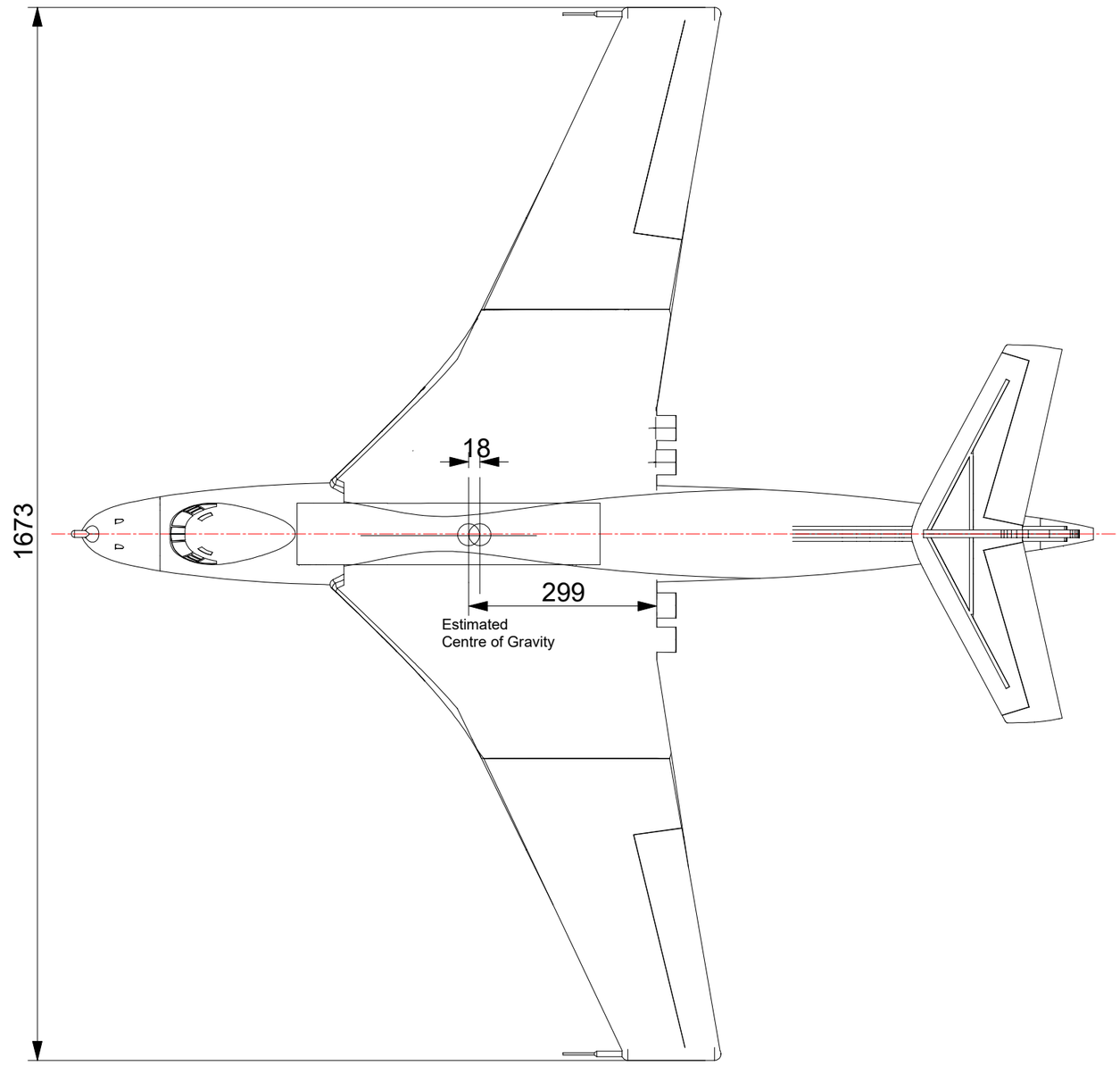

Vickers Valiant Large Parkjet

Designed by Craig Clarkstone

Copyright © 2023 All Rights Reserved

dimensions in mm. Not to Scale